Date: 12.11.2026

RAMAN RESEARCH INSTITUTE

C.V. Raman Avenue, Sadashivanagar, Bengaluru - 560080

Proposed construction of HI RES LABORATORY at RRI Campus, Bengaluru

Item Rate Tender & Contract for works

NIT No: RRI/E&B/NIT/PT-17/2026-27, Dated: 30.10.2026

TENDER DOCUMENT – TECHNICAL BID

ESTATES AND BUILDINGS – 2026-27

RAMAN RESEARCH INSTITUTE

C.V. Raman Avenue, Sadashivanagar, Bengaluru – 560080

NAME OF THE WORK**:** Proposed construction of HI RES LABORATORY at RRI Campus, Bengaluru

INDEX

SL. NO.	CONTENTS	PAGE NO.
01	Notice Inviting Tender, Eligibility Criteria, Evaluation Method, Other terms & conditions, Special conditions and other.	03-13
02	List of Documents to be submitted	14
03	Forms for completed works, Ongoing works, Bank solvency and Financial Turnover	15-18
04	Bid declaration format	19-20
05	Project commitment letter and Agreement form	21-22
06	Declaration by Tenderer/ contractor	23-25
07	Definitions, GCC & General Guidelines	26-84
08	Schedules	85-91
09	Formats	92-102

RAMAN RESEARCH INSTITUTE, BENGALURU

GOVERNMENT OF INDIA

NOTICE INVITING TENDER

Tender Notice No. **RRI/E&B/NIT/PT – 17/2026-27** Dated: 30.10.2026

1. On Behalf of the Director, Raman Research Institute, sealed, item-rate tenders are invited for the following work.

Sl. No	**Description**	**Details**
1.	Title of work	Proposed construction of HI RES LABORATORY at RRI Campus, Bengaluru
2.	Estimated cost put to tender	**RS. 2.45 Crores** inclusive of prevailing GST
3.	Period of completion in months reckoned from fifteenth day from the date of issue of work order.	Six Months
4.	Cost of tender document (a) Original set	Rs.590/- inclusive of GST
5.	Period during which the request for tender document can be obtained.	12/11/2026 to 02/12/2026
6.	Last date and time for receiptof tenders.	03/12/2026 at 3.00PM
7.	Due date and time of openingof tenders.	03/12/2026 at 4.00PM
8.	Earnest money deposit (EMD)	Rs. 4,90,000/-

2. Eligibility Criteria for Issue of Tender Documents:

Tender documents will be issued only to those who satisfy the following eligibility criteria:

Sl. No	Eligibility Criteria	Documentary proof for the eligibility(Self attested copies to be submitted)
a.	Should have satisfactorily completed the works as mentioned below during the last Seven years. i. Three similar works each costing not less than Rs. 98.00 Lakhs **(or)** ii. Two similar works each costing not less than Rs. 1.47 Crores **(or)** iii. One similar work costing not less than Rs. 1.96 Crores	i. Certified copy of Work Completion certificates along with work orders issued by the authority concerned to establish work experience. ii. Completion certificates for works issued by Private parties shall be supported by TDS (Tax Deducted at Source) certificates.
	Note: a) Similar work shall mean General Civil Works. b) Similar work shall mean Supply, Installation, Testing & commissioning of LT panels & LT/HT cable laying & allied Electrical works.	
b.	The value of executed works shall be brought to current costing level by enhancing the actual value of work at simple rate of 7% per annum, calculated from the date of completion to last date of receipt of application for bids.	
c.	The contractor shall submit all applicable warranty/guarantee certificates (One year) for the equipment, materials, and systems supplied and installed under the contract, along with the final bill, for the warranty periods specified in the work order and technical specification. The final bill shall not be processed until all required warranty/guarantee certificates have been submitted to and accepted by duration.	
d.	Certified copy of valid Class 1 Electrical contractor's License of the tenderer	In case the contractor does not possess valid class 1 electrical certificate, he shall engage an agency who is possessing valid class 1 electrical license.

e.	Should have had average annual financial turnover not less than Rs. 73.50 Lakhs of the work during the last three years ending 31st March of preceding year (2026).	Certified copy from charted Accountant for the Annual financial turnover and balance sheet showing Profit & Loss.
f.	Should not have incurred any loss in more than two years during the last five years ending 31st March, 2026.	
g.	Should have a solvency of Rs. 98.00 Lakhs of the work	Certified copy of current solvency certificate from any Scheduled Bank

3. Issue of tender documents on the basis of the documentary eligibility alone will not make a tenderer eligible for participating in the bidding. The documents furnished by the tenderers will be subjected to verification subsequently by Institute. If found not meeting the requirement, such offers will be rejected.

4. On request in writing, with requisite fee in the form of Demand Draft/ UPI transaction and eligibility documents specified above, tender documents along with all required documents can be obtained from **Estate Office, Raman Research Institute (RRI) (Sadashivnagar, Bengaluru-560080)**, Near Mekhri Circle, on any working day during the period mentioned in Para 1 above, except on Saturdays, Sundays and Public holidays or **download the softcopy from Central Public Procurement Portal (CPPP)/RRI website also & document fee in the form of Demand Draft to the address of RRI shall be submitted along with the technical bid.**

5. Tenders should be accompanied with Earnest Money Deposit for value specified in Para 1 above under sl.no.8, in the form of Deposit at Call receipt/ Term Deposit Receipt of any Scheduled Bank issued in favor of The Director, RRI (or) in the form of Bank guarantee issued by a scheduled bank. Earnest Money Deposit shall be valid for **120 days** from the due date of receipt of tenders.

6. The MSME units claiming exemption of EMD should submit MSME UDYOG AADHAAR MEMORANDUM or registration certificate issued by District Industries Centre (DIC) / Khadi & Industries board (KVIB) / Coir board / National Small Industries Corporation (NSIC) / Directorate of Handicrafts and handlooms or any other body specified by Ministry of MSME. The memorandum / certificate shall be valid as on due date / extended due date of the tender.

7. The MSME units claiming exemption of EMD should submit attested hard copy of MSME UDYOG AADHAAR MEMORANDUM or registration certificate as indicated in Para 6 above. If hardcopy is not received on or before due date and time of opening of the tender, the tender offer shall be summarily rejected.

8. Tenders should be submitted in three sealed cloths lined covers as below,

Cover i. Containing Technical Bid - This cover shall be super-scribed as "Technical Bid' and also the name of the work, NIT number and name of Tenderer. This cover should contain the full set of tender documents issued to the Tenderer (except the price bid - which should be in Cover ii), duly filled in and signed. In case the Tenderer intends any observation / comments / remarks on Institutional conditions and specifications, the same shall be brought out in the technical bid or else a confirmation that the Tenderer agrees to the terms and conditions and specifications of the tender 'in Toto' shall be enclosed. **Earnest money Deposit** in the prescribed form should accompany the Technical Bid Envelope. The Tenders without requisite EMD with full validity as specified in Para (5) above will be summarily rejected.

Cover ii. Containing Price Bid - This cover shall be super-scribed as 'Price Bid' and also the name of the work, NIT number and name of Tenderer. The Tenderers shall quote the rates in figures as well as in words tendered by them. All corrections shall be attested by the date and initials of the Tenderer. The rates shall be filled only on the price bid format furnished along with the tender document. Any conditions in the price bid will make the price bid invalid and liable for rejection.

Both the covers (*Cover i & Cover ii*) mentioned above shall be put in another sealed cloth lined cover i.e., *Cover-iii*, super-scribing the name of work, NIT number and Name of Tenderer. Tenders submitted in any other manner will be rejected.

Price bid shall not be put in the technical bid, in which case the entire tender is liable to be rejected.

9. Price shall be quoted onlyon the price schedule / bill of quantities forming part of the original set of tender documents issued by Institute and returned in original in *cover (iii)* specified in Para 8 above.

10. The tender accepting authority on behalf of The Director, RRI is not bound to accept the lowest or any other tender and reserves the authority to reject any or all the tenders received without assigning any reason. All tenders in which any of the prescribed condition is not fulfilled or any condition including that of conditional rebate is put forth by the tenderer shall be summarily rejected.

11. Tenderers shall sign all the pages of Technical & Commercial bid and Price bid without fail. The original full set of tender documents, duly filled in at required pages, along with drawings should be returned along with the tender**.** (If required, tenderers can obtain an additional set of tender documents for reference on payment as mentioned in Para 1).

12. Tenders will be received and opened at the Estate Office, Raman Research Institute on the stipulated date and time specified in Para 1 above. Delayed and late tenders will be summarily rejected.

Tenders will be opened in the presence of attending tenderers or their authorized representatives.

13. On the due date of opening, the ***Cover-iii*** will be opened initially. Subsequently, on the same day ***Cover-i***, i.e., technical bid, of those tenderers who have furnished valid EMD and requisite documents only will be opened. On opening of ***Cover-i***, i.e., technical bid, further detailed scrutiny/evaluation will be carried out. During the evaluation of technical bids, the documents furnished by the tenderers will be scrutinized in detail. Any tender, found as not fulfilling the eligibility criteria will be rejected at this stage and such offers will not be considered for further processing. The tenders shall further evaluate based on the documents furnished and made qualified for further processing of the tenders. If required, their completed works will be inspected. The ***Cover-ii,*** i.e., price bids of only those tenderers who have been qualified during the scrutiny and technical evaluation will be opened separately on a specified date (with due intimation to the qualified bidders) and further processed, as per tender procedure/ stipulations.

14. The Tenderer, whose offer is accepted, will be required to furnish performance guarantee of 5% (Five Percent) of the tendered amount within 15 days from the date of issue of letter of intent/ work order. This guarantee shall be in the form of Deposit at Call receipt/ Term Deposit Receipt of any Scheduled Bank issued in favor of Director, RRI (or) in the form of Bank guarantee issued by a scheduled bank in accordance with the prescribed form. In case the contractor fails to deposit the said performance guarantee within the period specified including the extended period if any, the Earnest Money deposited by the contractor will be forfeited and letter of intent/ work order cancelled automatically without any notice to the contractor. The Earnest Money deposited along with tender shall be refunded only after receiving the aforesaid performance guarantee.

15. The refund of EMD of unsuccessful tenderers will be made through cheque/electronic mode, within a month after the expiration of our bid validity period or any extension to it.

16. Intending tenderers may inspect the site before submitting the tenders, with theprior permission of Estates & Buildings Department, RRI. Interested tenderers may reach the Estate Office on Telephone No: 9480836088, Email: estate@rri.res.in

17. If the tenderer fails to complete the work in specified period of **Six months** as specified in NIT under para no.1. The tenderer is liable to pay compensation for delay of work at the rate of 1% per every week of delay for the incomplete works (which will be levied). The Institute reserves the right not to accept the work in part or full. Exceptions: Force Majeure.

18. The tender accepting authority on behalf of The Director, RRI is not bound to acceptthe lowest or any other tender and reserves the authority to reject any or all the tenders received without assigning any reason. All tenders in which any of the prescribed condition is not fulfilled or any condition including that of conditional rebate is put forth by the tenderer shall be summarily rejected.

19. Additions and Alterations in the work: The Bill of quantities indicate approximate estimated quantities. If at any time after acceptance of the tender, Engineer-in-charge shall decide to abandon or reduce the scope of the works for any reason whatsoever and hence not require the whole or any part of the works to be carried out, the Engineer-in-charge shall give notice in writing to that effect to the contractor and the contractor shall act accordingly in the matter. The contractor shall have no claim to any payment of compensation or otherwise whatsoever.

20. The Tenderer has no right to suggest alternate terms and Conditions.

21. The tender accepting authority on behalf of T h e Director, RRI also reserves the right to alter the scope/ or reduce quantum of work before issue of work order and the tenderer shall not have any claim what so ever on this account.

22. The tender accepting authority on behalf of Director, RRI reserves the right of accepting the whole or any part of the tender and the tenderer shall be bound to perform the same at the rate quoted.

23. Canvassing directly or indirectly, in connection with tender is strictly prohibited and the tenders submitted by the contractors who resort to canvassing will be liable for rejection.

24. The tender accepting authority reserves the option to give preferences to the offers in accordance with the policies of the Government from time to time.

25. The tenderer shall not be permitted to tender for works in the Institute

who are near relatives to any Gazetted Officer in the Institute. Any breach of this condition by the contractor would render him liable for rejection of tender or cancellation of contract.

26. On award of work, the contractor shall not be permitted to sub-contract any portion of work, in full or even part, without the prior written consent by the Institute.

27. The tender should be valid for **minimum period of 120 days** from the due date of receipt of the tender specified in Para 1 above. If any tenderer withdraws the offer within the validity period or makes any modifications in the terms and conditions of the tender which are not acceptable to the Institute, the Institute shall without prejudice to any other right or remedy, be at liberty to forfeit 50% (Fifty Percent) of the Earnest Money Deposit absolutely. Further, the tenderer shall not beallowed to participate in the re-tendering process of the work.

28. On concluding the tender, an agreement shall be drawn with the successful tenderer on a stamp paper of Rs.500/-.

Administrative Officer
RAMAN RESEARCH INSTITUTE, BENGALURU

OTHER TERMS AND CONDITIONS:

1. All the pages of tender document to be signed by the bidder and submit.
2. The tenders shall be complete in all respects and the details specified in this request shall be adhered to before submission. Otherwise, tenders are liable to be rejected.
3. Tenders shall be valid for **120** days from the date of acceptance of tender. Bid submitted for a shorter period will be rejected.
4. Unit price should be mentioned legibly and clearly. Taxes should be indicated separately.
5. Each of these tenders should be sealed in a separate envelope and bear the reference number and due date of this enquiry and indicate their contents: as technical bid or price bid. These sealed tenders shall be enclosed in an outer cover as brought out in para no.08 of NIT.
6. The Institute reserves the right to modify the technical specification or the required quantity at any time but within one week before the due date and will be duly notified on the website. After awarding the work, the final work order quantity may be lower or higher than that mentioned in the tender.
7. The Institute reserves the right to postpone/extend the due date for submission/opening date of the tender without assigning any reason.
8. The bidders shall have proven record of executing a similar work and provide a list of their clients with their official contacts from whom the Institute could if so desires, contact for referee reports.
9. The Financial Bids will be opened only for those technical bids which are found qualified and approved by our technical personnel.
10. The Institute reserves the right to reject any or all of the tenders received without assigning any reason. It also reserves the right to accept an offer other than the lowest.
11. The Institute reserves the right to call potential bidders for technical discussions and product demonstrations.
12. Any inputs received from any experts for evaluation of the technical bids received assuring confidentiality will be made available to only those who are involved in decision-making. The final decision arrived by the Institute will be announced on its website.
13. The opening of the financial bid based on the technical evaluation after satisfying with the clarifications sought if any, and such financial bid/s will be opened on informing bidder/s in due course in their presence.
14. Any Technical clarification required towards submission of offer may please be mailed to estate@rri.res.in

15. In the event no rate has been quoted for any item / items, leaving space both in figure(s), word(s) and amount blank, it will be presumed that the contractor has included the cost of this / these item(s) in other items and rate for such item(s) will be considered as zero and will be required to execute the work accordingly.

16. Rates quoted by the Contractor in item rate tender in figures and words shall be accurately filled in so that there is no discrepancy in the rates written in figures and words. However, if any discrepancy is found, the rates in words shall be taken as correct.

17. The acceptance or rejection of the bids shall vest with RRI, Bengaluru, India. RRI also reserves the right to reject any or all tenders in part or in full without assigning any reasons thereof.

18. Even though the bidders may meet the qualifying criteria, they are subject to be disqualified if they have made misleading or false representations in the forms, statements and attachments submitted in proof of the eligibility requirements.

19. A self-declaration towards not having record of poor performance such as abandoning the works / not properly completing the contract, inordinate delays in completion, litigation history, or financial failures etc., has to be provided.

20. The Bidder along with his team, at the Bidder's own responsibility and risk is encouraged to visit and examine the Site of Work and obtain all information that may be necessary for preparing the Bid and entering into a contract for Civil Works. The costs of visiting the Site shall be borne by the Bidder. (Timings 2.00 pm to 5.00 pm – Monday to Friday).

21. The unit rates and the prices shall be quoted by the bidder in Indian Rupees.

22. **Performance Guarantee & Security Deposit**:

    On award of work – The bidder should furnish 5% of tendered value as performance guarantee in the form of DD or Bank Guarantee of any Scheduled Bank. This performance guarantee will be returned after due date from the satisfactory completion of work, providing the work has been carried out in accordance with agreement provision.

    The Performance Guarantee shall be valid through the period of completion of work, plus six months as claim period.

    Security Deposit

    On completion of the work 5% of the tendered value will be deducted in the running account bills. The Security deposit will be returned after satisfactory completion of the work as well as defect liability if any, as per the conditions of the contract agreement. In case of failure to render the contracted service, either at the time of execution or during the defect liability period or non-compliance of due performance of contract, the balance payable will be forfeited.

23. The bidder is expected to comply with relevant labour laws while executing the work.
24. The bidder shall be responsible for the safety and health of all the workers during the executionof work.
25. The contractor should execute the work in all respect, strictly in accordance with specifications,drawings, orders, etc.
26. Samples of all materials to be incorporated in the work shall be submitted for the approval before starting the work without claiming any extra cost.
27. The Institute should have no liability to the bidder, if he/she incurs loss on account of stoppage of workor delay due to violation with respect to safety and quality procedure.
28. The rates quoted by the Contractor should be exclusive of all taxes applicable, taxes and other levies should be indicated separately.
29. For specialized items the work shall be carried out completely as per the manufacturer's specifications and recommendations/CPWD specifications /IS specifications, if the item specifications are incomplete.
30. The work to be carried out under the Contract shall, except as otherwise provided in these conditions, include all labour, materials, tools, plants, equipment and transport which may be required in preparation of and for the full and entire execution and completion of the works. The descriptions given in the Schedule of Quantities shall, unless otherwise stated, be held to include wastage on materials, carriage and cartage, carrying and return of empties, hoisting, setting, fitting and fixing in position and all other labours necessary in and for the full and entire execution andcompletion of the work as aforesaid in accordance with good practice and recognized principles.
31. All disputes/Arbitration if any are subject to jurisdiction of courts in Bangalore only.
32. In addition to the above mentioned all terms & conditions, the tenderer shall execute the work as per the latest CPWD General Conditions of Contract (GCC).

Special Terms and conditions:

1. Site Engineer (Preferably Civil & Electrical Engineer) with sound experience in similar projects has to be deployed for this project and the details of the person has to be attached along with the technical bid.

2. **Supply of Electricity: -** Electricity required for the work shall be arranged by the contractor himself. Electricity if supplied to the contractor by the Institute will be metered and amount will be recovered in the Bills as per actual at rates fixed by the Institute. The power lines to be laid in an approved manner and shall abide as per the Indian Electricity rules. Supply of electricity from the Institute is not mandatory. Non-supply of electricity by the Institute cannot be held as reason for shortfall in progress.

3. **Water supply**: The Contractor has to make his own arrangement for water supply. However, if water supply to the worksite at one convenient point is made available by the Institute, the charges for the consumption of water will be borne by the Contractor at 1% of the value of the work.

4. The bidder shall ensure the work area/campus is kept clean and make necessary arrangements to avoid disturbance to the staff in surrounding buildings of the Institute campus in an environmentally friendly way.

5. The Extra items will be paid based on the market rate with contractor profit of 15%.

6. All extra item/substitution item will be derived on the basis of latest General Conditions of Contract of CPWD.

7. Price escalation clause is not applicable.

SELF ATTESTED COPY OF THE FOLLOWING DOCUMENTS SHALL BE SUBMITTED ALONG WITH TECHNICAL BID, FAILING WHICH THE TENDERS ARE LIABLE TO BE REJECTED

1. Bid declaration submitted on the letter head as per the format enclosed.
2. Self-declaration towards not having record of poor performance such as abandoning the works / not properly completing the contract, inordinate delays in completion, litigation history, or financial failures etc., has to be provided.
3. Work completion certificates issued by the authority concerned to establish work experience.
4. Documentary proof for having executed the work of similar nature and comparable magnitude as per the eligibility criteria.
5. Work completion certificates for works issued by private parties shall be supported by TDS (Tax Deducted at Source) certificates.
6. Annual financial turnover and balance sheet showing Profit & Loss for the last five years ending 31.03.2026 issued by Chartered Accountant.
7. A valid solvency certificate for this particular Tender to be submitted for the said value as mentioned in the sl.no.2d of NIT, issued by any scheduled bank as prescribed under FORM – B in this Current Financial year 2026-2027.
8. A list of ongoing works indicating financial commitment for each of these works during the stipulated period of completion mentioned for the subject tender as per the FORM - D.
9. PAN and GST details.
10. Earnest Money Deposit. In case the tenderer is claiming any exemption under NSIC/MSME registration, copy of relevant valid registration certificate clearly indicating the registered value and monitory limit should be attached.
11. Project commitment letter submitted on the letter head as per the format enclosed.
12. Company profile with details.
13. ADDITIONAL documents if any.

FORM 'A'

FINANCIAL INFORMATION

1. Financial Analysis – Details to be furnished duly supported by figures in balance sheet/ profit and loss account for the last five years duly certified by the Chartered Accountant, as submitted by the applicant to the Income Tax Institute (copies to be scanned & uploaded)

Particular	Financial Year				
	2021-22	2022-23	2023-24	2024-25	2025-26
(i) Gross Annual Turnover					
(ii) Profit / Loss (Standalone)					
(iii) Certified by					

2. Financial arrangements for carrying out the proposed work.

3. The following certificates are to be submitted:

   (a) Profit & loss account certified by CA & as submitted to Income Tax Institute.
   (b) Solvency Certificate from bankers in the Form 'B'

Signature of
Chartered Accountant with seal

FORM 'B'

FORM OF BANKER'S CERTIFICATE FROM A SCHEDULED BANK

This is to certify that to the best of our knowledge and information that M/s.__(With address) a customer of our bank are/ is respectable and can be treated as good for any engagementup to a limit of Rs._____(Rupees__).

This certificate is issued without any guarantee or responsibility on the bank or any of the officers.

(Signature)

For the Bank

NOTE: (1) Banker's certificate should be on letter head of the Bank.

FORM 'C'

DETAILS OF ALL SIMILAR WORKS COMPLETED IN ALL RESPECT DURING THE LAST SEVEN YEARS ENDING PREVIOUS DAY OF LAST DATE OF SUBMISSION OF TENDERS (STARTING WITH LATEST WORK)

SL.NO	Name of work/ project and location	Owner or sponsoring organization	Cost of work rupees (in lakhs)	Date of commencement as per contract	Stipulated date of completion	Actual date of completion	Litigation/ arbitration pending/ in progress with details*	Name and address/ phone no of officer to whom reference may be made	Remarks
1									

*Indicate gross amount claimed and amount awarded

by the Arbitrator. Notes:

(i) The tenderer may submit separate form for giving details of work (completed) for each year tofill up the details as above. Separate sheets if any shall be numbered in sequence.

(ii) The copies of the work orders for each work be enclosed.

(iii) Certified that the above list of works is complete and no work has been left-out and the information given is correct to my knowledge and belief.

(iv) The hard copy of all similar works completed during the last seven years ending previous day of last date of submission of tenders (starting with latest work) shall also be submitted along with the technical bid.

FORM 'D'

DETAILS OF ALL WORKS OF ANY NATURE UNDER EXECUTION OR AWARDED

(No works shall be left out)

SL.NO	Name of work/ project and location	Owner or sponsori	Cost of work rupees(in lakhs)	Date of commencement as percontract	Stipulated date of completion	Up to date percentage progress	Slow progress If any & reasons there of	Name and address/ phone No. of officer to whom reference may be made.	Remarks
1									

Notes:

(i) The tenderer may submit separate form for giving details of work (completed) for each year to fill up the details as above. Separate sheets if any shall be numbered in sequence.

(ii) The copies of the work orders for each work be enclosed.

(iii) Certified that the above list of works is complete and no work has been left-outand the information given is correct to my knowledge and belief.

The hard copy of all similar works completed during last seven years ending previous day of last date of submission of tenders (starting with latest work) shall also be submitted along withthe technical bid.

FORM OF BID-SECURITY DECLARATION

[The Bidder shall fill in this Form in accordance with the instructions indicated]

To the Administrative Officer

Raman Research Institute

C.V. Raman Avenue, Sadashivnagar, Bangalore – 560 080

Ref: Tender document No._____dated..... 2026

We, the undersigned declare that:
We know that the bid should be supported by a Bid Security Declaration in accordance with your conditions. We hereby declare that the prices offered by us against RRI tender No.....dated 2026 for **Proposed construction of HI RES LABORATORY at RRI Campus, Bengaluru** Will be firm for a period of 120 days from the date when the tenders are finalized.

We accept to automatically be suspended from being eligible for bidding in any contract in RRI for a period of 3 years from the date of opening of Bid. If we are in breach of our obligation(s) under the bid conditions, because we:

After having been notified of the acceptance of our bid by the Contracting Authority within the period of bid validity:

1) We failed or refused to furnish a Performance Security in accordance with the Condition of the Tender Document of Tender No.....
OR

2) We failed or refused to sign the contract.

We know that this Bid-Securing Declaration will expire, if contract is not awarded to us, upon:

1) Our receipt of your notification to us of the name of the successful bidder or

2). Twenty -eight days after the expiration of our Bid or any extension to it
Dated this _____ day of_____

For and on behalf of M/s._____

Address:

Signature

Name

In the capacity of

(DULY AUTHORISED TO SIGN THE BID)

Location of Work:
Raman Research Institute, C V Raman Avenue, Sadashivanagar, Bangalore-560080.

TECHNICAL SPECIFICATIONS:

Note: The work shall be carried out as per specifications of BOQ / Standard specifications of CPWD and/or Indian Standard Stipulations as the case may be.

PROJECT COMMITMENT LETTER:

To

Raman Research Institute,

Sadashivanagar,

Bangalore-560 080.

Sub: Proposed construction of HI RES LABORATORY at RRI Campus, Bengaluru

NIT No: RRI/E&B/NIT/PT-17/2026-27, Dated: 30.10.2026

Sir,

We hereby confirm and Commit with the detailed technical inputs mentioned in the tender specificationsand abide by the provisions/terms and conditions of the contract.

For and on behalf of M/s._____ Address:

SignatureName

In the capacity of

(DULY AUTHORISED TO SIGN THE BIDDER)

Agreement Form

This agreement, made the_____day of_____2026, between the Administrative officer, RRI, Bangalore, India (hereinafter called "the Owner)" of the one part and

_____

[Name and address of contractor] (Hereinafter called "the Contractor") of the other part. Whereas the Owner is desirous that the **Proposed construction of HI RES LABORATORY at RRI Campus, Bengaluru,** as part of RRI, Bangalore. (Hereinafter called "the Works") and the Owner has accepted the Bid by the Contractor for the execution and completion of such Works and the remedying of any defects therein, at a contract price of Rs.....

NOW THIS AGREEMENT WITNESSETH as follows:

1. In this Agreement, words and expression should have the same meanings as are respectively assigned to them in the Conditions of Contract hereinafter referred to, and they should be deemed toform and be read and construed as part of this Agreement.
2. In consideration of the payments to be made by the Owner to the Contractor as hereinafter mentioned, the Contractor hereby covenants with the Owner to execute and complete the Works and remedy any defects therein in conformity in all aspects with the provisions of the Contract.
3. The Owner hereby covenants to pay the Contractor in consideration of the execution and completionof the Works and the remedying the defects wherein the Contract Price or such other sum as may become payable under the provisions of the Contract at the times and in the manner prescribed by the Contract.
4. The following documents should deem to form and be read and construed as part of this Agreement.

In witness whereof, the parties thereto have caused this Agreement to be executed the day and yearfirst before written.

was here unto affixed in the presence of:

Signed, Sealed and Delivered by the said _____ in the presence of:

Binding Signature of Owner (Authorized signatory on behalf of RRI) __

Binding Signature of Contractor (Authorized signatory on behalf of Contractor/Vendor) _____

B. DECLARATIONS BY THE TENDERER/ CONTRACTOR

Item Rate Tender for Works

Memorandum:

Tender Notice No: RRI/E&B/NIT/PT – 17/2026-27, Dated: 30.10.2026

a) **Title of Work: Proposed construction of HI RES LABORATORY at RRI Campus, Bengaluru.**

b) **Estimated cost: Rs. 2.45/- Crores (Inclusive of prevailing GST)**

c) **Earnest Money: Rs. 4,90,000/-**

d) Performance guarantee/Security Deposit: 5% of the Work order value

e) Time allowed for completion of the work is **Six Months from fifteenth day of date of issue of work order** as mentioned in the tender.

1. I/ We hereby tender for the execution for the Director, Raman Research Institute for the work specified in this Written Memorandum and the notification inviting tender (NIT) within the time/s specified in the Memorandum at the rates specified in the attached schedule of quantities and in all respects with these specifications, design, drawings and instructions in writing referred to in Rules here of and in clause 11 of the General conditions of Contract (GCC) and with such materials as provided for by and all other respects in accordance with such conditions so far as applicable.

2. Should this tender be accepted in whole or in part, I/We hereby agree to abide by and fulfill all the terms and provisions of General conditions of contract (GCC) and General Guidelines to be read in conjunction with GCC, annexed here to and all the terms and provisions contained in NIT, which has been read by me/ us and explained to me/ us so far as applicable or in default thereof to forfeit and pay to the Director, Raman Research Institute or the successors in Office the sums of money mentioned in the said conditions.

3. In the event of accepting my/ our offer by Institute, I/ We agree to revalidate the earnest money deposited as Performance Guarantee within 15 days from the date of issue of letter of intent/ work order. In case, if I/ We fail to revalidate the same within the period specified including the extended period if any.

4. I/ We agree to execute all the works referred to in the tender documents upon the terms and conditions contained or referred therein and to carry out such deviations may be ordered subject to the condition of clause 12 herein after referred to as the deviation limit at the rates quoted in the tendered documents and those in excess of that limit at the rates to be determined in accordance with the provision contained in clause 12 of the General conditions of Contract (GCC).

5. I/We hereby declare that I/ We shall treat the tender documents, drawings and other records connected with the work as secret/ confidential documents and shall not communicate the same or use the information in any matter prejudicial to the safety of the country.

6. I/ We declare that I/We **M/s.....** possess a copy of the Specifications of Civil Engineering works/ Specification for Electrical works/ Specification for Air conditioning works of Estates and Buildings Group, Raman Research Institute, Government of India. I/We have signed the Master copy of the Specifications available in the office of the Estates and Buildings Group, Raman Research Institute, in token of noting the contents therein.

   I/We also declare that I/We have perused in detail and examined closely the specifications and I/We agree to be bound by and comply with all such specifications for this work.

   I/We declare that the work will be carried out as per the specification in tender document and as per the specifications said above. The items of work not covered in the specifications said above will be carried out as per the specifications in the relevant CPWD specifications, and if not covered in CPWD specifications the work will be carried out as in the relevant specifications of Bureau of Indian Standard, and if not covered in any of the above, the work will be carried out as directed in writing by the Engineer-in- charge.

7. I/We declare that I/We **M/s.....** are not associated, nor has been associated in the past, directly or indirectly with the consultant or any other entity that has prepared the design, specification and other documents for the project for which tenders are invited.

I/We also declare that I/We **M/s.....** are not associated, nor has been associated in the past, directly or indirectly with the consultant or any other entity who hasbeen engaged by the Institute to provide consulting services for the preparation of supervision of the works for which tenders are invited.

I/We declare that the rates quoted by me/us are on the basis of the above. Dated the .....Day of ..... 2026 Witness

Address Signature of the tenderer/ Contractor

Occupation

The above tender for a sum of Rs..... is hereby accepted by me on behalf of the Director, Raman Research Institute. Dated the ..... Day of 2026

Signature of tenderer/ Contractor with legal address/ Witness before Submission of tender

Signature of the Officer by whom accepted

A. DEFINITIONS

1. **CONTRACT:**

The 'Contract' means the documents forming the tender and acceptance thereof and the formal agreement executed between the Administrative Officer, Raman Research Institute and the Contractor, together with the documents referred to therein including these conditions, thespecifications, design, drawings and instructions issued from time to time through correspondences through letters and emails and site orders by the inspecting officers & Engineer-in-charge and all these documents taken together shall be deemed to form one contract and shall be complementary to one another.

2. **CONTRACTOR:**

The 'Contractor' means the individual or firm or company, whether incorporated or not, undertaking the work and shall include the legal personal representatives of such individualor the persons composing such firm or the successors of such firm or company and the permitted assignee of such individual or firm or firms or company.

3. **INSTITUTE:**

'INSTITUTE' means Raman Research Institute, Government of India.

4. **ENGINEER-IN-CHARGE:**

The 'Engineer-in-charge' means the Technical Officer-A, RRI, as the case may be, or the appropriate competent authority declared by the Institute who shall supervise and be in charge of the work and who shall sign the contract on behalf of the Director, RRI.

5. **WORK (S):**

The expression 'Works' or 'Work' shall unless there is something either in the subject or context repugnant to such construction, be construed and taken to mean the works by or by virtue of the contract contracted to be executed whether temporary or permanent and whether original, altered, substituted or additional.

6. **SITE:**

The 'Site' means the land/or other places on, into or through which work is to be executed under the contract or any adjacent land, path or street through which work is to be executedunder the contract or any adjacent land, path or street which may be allotted or used for the purpose of carrying out the contract.

7. MARKET RATE:

'Market Rate' shall be the prevailing market rate as finalized by the Engineer-in-charge on the basis of the cost of materials and labor at the site including applicable taxes, duties and also the transportation charge to where the work is to be executed plus the percentage mentioned in schedule `F' to cover all overheads and profits.

8. SCHEDULE OF RATES (SOR):

'Schedule of Rates' of the Institute mentioned in the schedule `F' here under, with the amendments thereto issued up to the date of receipt of tender.

9. TENDERED VALUE:

'Tendered Value' means the value of the entire work as stipulated in the letter of award or work order.

B. GENERAL CONDITIONS OF CONTRACT (GCC)

INDEX

Clause No.	Description	Page. No
Clause 1	Performance Guarantee	
Clause 1A	Security Deposit	
Clause 2A	Compensation for Delay	
Clause 2B	***Deleted***	
Clause 3	Determination of Contract	
Clause 3A	Closing of contract by either party	
Clause 4	Contractor liable to pay compensation even if action is nottaken under clause 3.	
Clause 5	Time & Extension for Delay	
Clause 6	Measurement of work done	
Clause 6A	Computerized Measurement Book	
Clause 7	Payment	
Clause 8	Completion certificate	
Clause 8A	Contractor to keep site clean.	
Clause 8B	***Completion Plan***	
Clause 9	Payment of final bill	
Clause 9A	Payment of contractor's bill to banks	
Clause 10	***Deleted***	
Clause 10A	Materials to be provided by the Contractor	
Clause 10B (i)	Secured Advance	
Clause 10B ii)	***Deleted***	
Clause 10C i)	***Deleted***	
Clause 10C ii)	***Deleted***	
Clause 10D	Dismantled materials belong to Institute	
Clause 10E	***Deleted***	

Clause 11	Works to be executed in accordance with specification,drawings, orders etc.,	
Clause 11A	Action where no specification.	
Clause 12	Deviations/ Variations, Extent and Pricing	
Clause 13	Foreclosure of Contract due to abandonment or reductionin scope of work	
Clause 14	***Deleted***	
Clause 15	***Deleted***	
Clause 16	Action in case of work not done as per specification	
Clause 16A	Notice to be given before covering up.	
Clause 17A	Contractor liable for damages, defects during maintenanceperiod.	
Clause 17B	Special Condition on taking Insurance Policy for thewhole work order value by the contractors'	
Clause 18	Contractors to supply tools and plants.	
Clause 18A	Recovery of compensation paid to workmen	
Clause 18B	Ensuring payment and amenities to workers if contractorfails.	
Clause 19	Labour Laws/ Safety Provisions to be Complied by theContractor	
Clause 20	Minimum wages act	
Clause 21	Work not to be sublet. Action in case of insolvency.	
Clause 22	Compensation payable are without reference to actual lossor damages.	
Clause 23	Change in firm's constitution to be intimated.	
Clause 24	***Deleted***	
Clause 25	Settlement of Disputes and Arbitration.	
Clause 25A	***Deleted***	
Clause 26	Patent rights	
Clause 27	***Deleted***	
Clause 28	***Renumbered as Clause 11A***	

Clause 29	Withholding and lien in respect of sums due from Contractor.	
Clause 29A	Lien in respect of claims in other Contracts	
Clause 30	Termination of Contract on death of contractor	
Clause 31	Water Supply	
Clause 32	Electricity	
Clause 33	Return of Govt. Surplus materials to Govt.	
Clause 34	***Deleted***	
Clause 35	***Deleted***	
Clause 36	Employment of Graduate/ Diploma Engineers	
Clause 37	***Deleted***	
Clause 38	***Deleted***	
Clause 38A	***Deleted***	
Clause 39	Relative working with Institute	
Clause 40	Restriction for employing retired Government Servant	
Clause 41	Return of materials and recovery for excess material issued.	
Clause 42	***Deleted***	
Clause 43	Apprentice Act to be complied with.	
Clause 44	***Deleted***	
Clause 45	Release of Security deposit after labour clearance	

CLAUSE 1
PERFORMANCE GUARANTEE

(i) The contractor shall submit an irrevocable Performance Guarantee of 5% (Five percent) of the 'tendered amount' in addition to other deposits mentioned elsewhere in the contract for his proper performance of the contract agreement, (not withstanding and/or without prejudice to any other provisions in the contract) within period of 15 days from the date of issue of letter of acceptance. This period can be further extended by the Engineer-in-charge up to a maximum period of 15 days on written request of the contractor stating the reason for delays in furnishing the Guarantee, to the satisfaction of the Engineer-in-charge. This guarantee shall be in the form of Cash (in case guarantee amount is less than Rs.10,000/-) or Deposit at Call receipt of any scheduled bank/Banker's Cheque of any scheduled bank/Demand Draft of any scheduled/Pay Order of any scheduled bank (in case guarantee amount is less than Rs.1,00,000/-) or Government Securities or Fixed Deposit Receipts or Guarantee Bonds of any Scheduled Bank or the State Bank of India in accordance with the form annexed hereto. In case a fixed deposit receipt of any Bank is furnished by the contractor to the Government as part of the performance guarantee and the Bank is unable to make payment against the said fixed deposit/receipt, the loss caused thereby shall fall on the contractor and the contractor shall forthwith on demand furnish additional security to the Government to make good the deficit.

(ii) The Performance Guarantee shall be valid through the period of completion of work, plus six months as claim period. In case the time for completion of work gets enlarged, the contractor shall get the validity of Performance Guarantee extended to cover such enlarged time for completion of work. After satisfactory taking over the building/facility, with no defects, the performance guarantee shall be returned to the contractor without any interest within 15 days.

(iii) In case of works where high value equipment's under AC/ Electrical/ Mechanical are involved and wherever explicitly mentioned in this contract, for such works, the Performance Guarantee shall be refunded only after the defect liability period of one year from the date of completion.

(iv) The Engineer-in-Charge shall not make a claim under the performance guarantee except for amounts to which the RRI is entitled under the contract (not withstanding and/or without prejudice to any other provisions in the contract agreement) in the event of:

a) Failure by the contractor to extend the validity of the Performance Guarantee as described herein above, in which event the Engineer-in-Charge may claim the full amount of the Performance Guarantee.

b) Failure by the contractor to pay RRI any amount due, either as agreed by the Contractor or determined under any of the Clauses/Conditions of the agreement, within 30 days of the service of notice to this effect by Engineer-in-Charge.

(v) In the event of the contract being determined or rescinded under provision of any of the Clause/Condition of the agreement, the performance guarantee shall stand forfeited in full and shall be absolutely at the disposal of the RRI.

CLAUSE 1A

SECURITY DEPOSIT

On completion of the work 5% of the tendered value will be deducted in the running account bills. The security deposit be valid for the entire defect liability period mentioned in Clause 17A and for an additional period of three months. The security deposit will be returned after satisfactory completion of the work as well as defect liability if any, either at the time of execution or during defect liability or non-compliance of due performance of contract, the balance payable will be forfeited. In the event of contractor failing to furnish the security deposit on completion of the work, the performance guarantee already submitted will be converted into security deposit.

All compensations or the other sums of money payable by the contractor under the terms of this contract shall be deducted from this security deposit.

CLAUSE 2A

COMPENSATION FOR DELAY

If the contractor fails to maintain the required progress in terms of clause 5 or to complete the work and clear the site on or before the contract or extended date of completion, he shall, without prejudice to any other right or remedy available under the law to the Institute on account of such breach, pay as agreed compensation, the amount calculated as stipulated below for every completed day/ month (as applicable) that the progress remains below that specified in Clause 5 or that the work remains incomplete. This will also apply to items or group of items for which a separate period of completion has been specified.

Compensation for delay of work	@ 1% per every week of delay will be levied.

Provided always that the total amount of compensation for delay to be paid under this Condition shall not exceed 10% of the total tendered value of work or of the tendered valueof the item or group of items of work for which a separate period of completion is originally given. The amount of compensation may be adjusted or set-off against any sum payable to the contractor under this or any other contract with the Institute.

CLAUSE 2B DELETED

CLAUSE 3

DETERMINATION OF CONTRACT

Subject to other provisions contained in this clause, the Engineer-in-charge may, without prejudice to his any other rights or remedy against the contractor in respect of any delay, inferior workmanship, any claims for damages and/or any other provisions of this contract or otherwise, and whether the date of completion has or has not elapsed, by notice in writingabsolutely determine the contract in any of the following cases:

i) If the contractor having been given by the Engineer-in-Charge a notice in writing to rectify, reconstruct or replace any defective work or that the work is being performed in an inefficient or otherwise improper or un-workman like manner shall omit to comply with the requirement of such notice for a period of seven days thereafter.

ii) If the contractor has, without reasonable cause, suspended the progress of the work or has failed to proceed with the work with due diligence so that in the opinion of the Engineer- in-Charge (which shall be final and binding), he will be unable to secure completion of the work by the date for completion and continues to do so after a notice in writing of seven daysfrom the Engineer-in-Charge.

iii) If the contractor fails to complete the work within the stipulated date or items of work with individual date of completion, if any stipulated, on or before such date(s) of completion and does not complete them within the period specified in a notice given in writing in that behalf by the Engineer-in-Charge.

iv) If the contractor persistently neglects to carry out his obligations under the contract and/ or commits default in complying with any of the terms and conditions of the contract and does not remedy it or take effective steps to remedy it within 7 days after a notice in writing is given to him in that behalf by the Engineer-in-Charge.

v) If the contractor shall offer or give or agree to give to any person in Government service or to any other person on his behalf any gift or consideration of any kind as an inducement or reward for doing or forbearing to do or for having done or forborne to do any act in relation to the obtaining or execution of this or any other contract for Government.

vi) If the contractor shall enter into a contract with Government in connection with which commission has been paid or agreed to be paid by him or to his knowledge, unless the particulars of any such commission and the terms of payment thereof have been previously disclosed in writing to the Engineer-in-Charge.

vii) If the contractor had secured the contract with Government as a result of wrong tendering or other non-bonafide methods of competitive tendering or commits breach of Contract or Integrity Agreement.

viii) If the contractor being an individual, or if a firm, any partner thereof shall at any time be adjudged insolvent or have a receiving order or order for administration of his estate made against him or shall take any proceedings for liquidation or composition (other than a voluntary liquidation for the purpose of amalgamation or reconstruction) under any Insolvency Act for the time, being in force or make any conveyance or assignment of his effects or composition or arrangement for the benefit of his creditors or purport so to do, or if any application be made under any Insolvency Act for the time being in force for the sequestration of his estate or if a trust deed be executed by him for benefit of his creditors.

ix) If the contractor being a company shall pass a resolution or the court shall make an order that the company shall be wound up or if a receiver or a manager on behalf of a creditor shall be appointed or if circumstances shall arise which entitle the court or the creditor to appoint a receiver or a manager or which entitle the court to make a winding up order.

x) If the contractor shall suffer an execution being levied on his goods and allow it to be continued for a period of 21 days.

xi) If the contractor assigns, transfers, sublets (engagement of labour on a piece-work basis or of labour with materials not to be incorporated

in the work, shall not be deemed to be subletting) or otherwise parts with or attempts to assign, transfer, sublet or otherwise parts with the entire works or any portion thereof without prior written approval of the Engineer-in-charge.

When the contractor has made himself liable for action under any of the cases aforesaid, the Engineer-in-charge on behalf of the Director, Raman Research institute shall have powers:

a) To determine the contract as aforesaid (of which termination notice in writing to the contractor under the hand of the Engineer-in-charge shall be conclusive evidence). Upon such determination, Performance Guarantee under the contract shall be liable to be forfeitedand shall be absolutely at the disposal of the Institute.

b) After giving notice to the contractor to measure up the work of the contractor and to take such whole, or the balance or part thereof, as shall be un-executed out of his hands and to give it to another contractor to complete the work. The contractor, whose contract is determined as above, shall not be allowed to participate in the tendering process for the balance work.

In the event of above courses being adopted by the Engineer-in-charge, the contractor shall have no claim to compensation for any loss sustained by him by reasons of his having purchased or procured any materials or entered into any engagements or made anyadvances on account or with a view to the execution of the work or the performance of the contract. And in case action is taken under any of the provision aforesaid, the contractor shallnot be entitled to recover or be paid any sum for any work thereof or actually performed under the contract unless and until the Engineer-in-charge has certified in writing the performance of such work and the value payable in respect thereof and he shall only be entitled to be paid the value so certified.

CLAUSE 3A
CLOSING OF CONTRACT BY EITHER PARTY

In case the work cannot be started due to reasons not within the control of the contractor within 1/8th of the stipulated time for completion of work or one month whichever is higher, either party may close the contract. In case contractor wants to close the contract, he shall give notice to the department stating the failure on the part of department. In such eventuality, the Performance Guarantee of the contractor shall be refunded within following time limits, without any interest. The contractor will not be eligible for any compensation for

any damages what so ever caused due to closing of contract.

If the Tendered value of work is,

up to Rs. 45 lakhs: 15 days.

more than Rs.45 lac& up to Rs.2.5 Cr: 21 days.
exceeds Rs. 2.5 Cr: 30 days.

CLAUSE 4
CONTRACTORS REMAIN LIABLE TO PAY COMPENSATION, EVEN IF ACTION NOTTAKEN UNDER CLAUSE 3

In any case in which any of the power conferred upon the Engineer-in-charge by clause-3 thereof shall have become exercisable and the same shall not be exercised, the non- exercise hereof shall not construe a waiver of any of the conditions hereof and such

powers shall not be withstanding exercisable in the event of any future case of default by thecontractor and the liability of the Contractor for compensation shall remain unaffected (for which by any clause or clause hereof, he is declared liable to pay compensation amounting to the extent of his security deposit and the liability of the Contractor for past and future compensations shall remain unaffected). In the event of the Engineer-in-charge putting in force all or any of the powers vested in him under the preceding clauses he may, if he so desires after giving a notice in writing to the Contractor, take possession of (or at the sole discretion of Engineer-in-charge which shall be final) use as on hire (the amount of the hire money being also in the final determination of the Engineer-in-charge) all or any tools, plant, materials and stores in or upon the words or the site then of belongings to the Contractor or procured by the Contractor and intended to be used for the execution of the work or any partthereof paying or allowing for the same in account at the contract rates, or in case of these not being applicable at current market rates to be certified by the Engineer-in-charge whose certificate thereof shall be final, otherwise the Engineer-in-charge may by notice in writing tothe Contractor or his clerk of the works, foreman or authorized agents requesting him/them to remove such tools, plant, materials or stores from the premises (within a time to be specified in such notice) and in the event of the Contractor failing to comply with any such requisition, the Engineer-in-charge may remove them at the Contractor's expenses or sell by auction or private sale on account of the Contractor and at his risk in all respects and the certificate of the Engineer-in-charge as to the expenses of any such removal and the amountof the proceeds and expenses of any such sale shall be final and conclusive against the Contractor.

CLAUSE 5
TIME AND EXTENSION FOR DELAY

The time allowed for execution of the Works as specified in the Schedule 'F' or the extended time in accordance with these conditions shall be the essence of the Contract. The execution of the works shall commence from such time period as mentioned in schedule 'F' or from the date of handing over of the site whichever is later. If the Contractor commits default in commencing the execution of the work as aforesaid, Government shall without prejudice to any other right or remedy available in law, be at liberty to forfeit the Performance Guarantee absolutely.

5.1 As soon as possible after the Contract is concluded, the Contractor shall submit a Time and Progress Chart for each mile stone and get it approved by the Department. The Chart shall be prepared in direct relation to the time stated in the Contract documents for completion of items of the works. It shall indicate the forecast of the dates of commencement and completion of various trades of sections of the work and may be amended as necessary by agreement between the Engineer-in-Charge and the Contractor within the limitations of time imposed in the Contract documents, and further to ensure good progress during the execution of the work, the contractor shall in all cases in which the time allowed for any work, exceeds one month (save for special jobs for which a separate programme has been agreed upon) complete the work as per mile stones given in Schedule ' F'.

a) Project Management shall be done by using project management software for works costing more than Rs.5 Crore.

b) The project management shall be done using MS Project software for works costing more than Rs. 5 Crore and up to Rs. 20 Cr.

For works costing more than Rs. 20 Crore, project management shall be done using Primavera Software.

Programme Chart

(i) The Contractor shall prepare an integrated programme chart in MS Project/Primavera software for the execution of work, showing clearly all activities from the start of work to completion, with details of manpower, equipment & machinery required for the fulfillment of the programme within the stipulated period or earlier and submit the same for approval to the Engineer-in-Charge within ten days of award of the contract. A recovery of Rs. 2500/- (for works costing up to Rs.20 Crores)/ Rs. 5000/- (for works costing more than Rs. 20 Crores) shall be made on per day basis in case of delay in submission of the above

programme.

(ii) The programme chart should include the following:

a) Descriptive note explaining sequence of the various activities.

b) Network (PERT/CPM/BAR CHART).

c) Programme of procurement of machinery/equipment's having adequate capacity, commensurate with the quantum of work to be done within the stipulated period, by the contractor. In addition to above to achieve the progress of Work as per programme, the contractor must bring at site adequate shuttering material required for cement, Concrete and R.C.C. works etc. for three floors within one month from the date of start of work till the completion of RCC work as per requirement of work. The contractor shall submit shuttering schedule adequate to complete structure work within laid down physical milestone.

(iii) If at any time, it appears to the Engineer-in-Charge that the actual progress of work does not conform to the approved programme referred above or after rescheduling of milestones, the contractor shall produce a revised programme within 7 (seven) days, showing the modifications to the approved programme to ensure timely completion of the work. The modified schedule of programme shall be approved by the Engineer in Charge. A recovery of Rs. 2500/- (for works costing up to Rs. 20 Crores)/Rs. 5000/- (for works costing more than Rs. 20 Crores) shall be made on per day basis in case of delay in submission of the modified programme.

(iv) The submission for approval by the Engineer-in-Charge of such programme or such particulars shall not relieve the contractor of any of the duties or responsibilities under the contract. This is without prejudice to the right of Engineer-in• Charge to take action against the contractor as per terms and conditions of the agreement.

(v) The contractor shall submit the progress report using MS Project/Primavera software with base line programme referred above for the work done during previous month to the Engineer-In-charge on or before 5th day of each month failing which a recovery Rs. 2500/- (for works costing up to Rs. 20 Crores)/Rs. 5000/- (for works costing more than Rs. 20 Crores) shall be made on per day basis in case of delay in submission of the monthly progress report.

5.2 If the work(s) be delayed by:

i) force majeure, or

ii) abnormally bad weather, or

iii) serious loss or damage by fire, or

iv) civil commotion, local commotion of workmen, strike or lockout, affecting any of the trades employed on the work, or

v) delay on the part of other contractors or tradesmen engaged by Engineer-in-Charge in executing work not forming part of the Contract, or

vi) non-availability of stores, which are the responsibility of Government to supply or

vii) non-availability or break down of tools and Plant to be supplied or supplied by Government or

viii) Any other cause which, in the absolute discretion of the Engineer-in-Charge is beyond the Contractor's control.

Then upon the happening of any such event causing delay, the contractor shall immediately give notice thereof in writing to the authority as indicated in schedule 'F' but shall nevertheless use constantly his best endeavors to prevent or make good the delay and shall do all that may be reasonably required to the satisfaction of the Engineer-in-charge to proceed with the works.

5.3 Request for rescheduling of milestones and extension of time, to be eligible for consideration, shall be made by the Contractor in writing within fourteen days of the happening of the event causing delay on the prescribed form Engineer-in-charge. The Contractor may also, if practicable, indicate in such a request the period for which extension is desired.

5.4 In any such case, Engineer-in-charge may give a fair and reasonable extension of time and reschedule the mile stones for completion of work. Such extension or rescheduling of the milestones shall be communicated to the Contractor by

Engineer- in-charge in writing, within 1 month or 4 weeks of the date of receipt of such request respectively. Non-application by the contractor for extension of time/ rescheduling of the milestones shall not be a bar for giving a fair and reasonable extension/ rescheduling of the milestones by Engineer-in-charge and this shall be binding on the contractor.

CLAUSE 6
MEASUREMENT OF WORKDONE

Engineer-in-charge shall, except as otherwise provided, ascertain and determine by measurement, the value in accordance with the contract of

work done. All measurement of all items having financial value shall be entered in Measurement Book and / or level field book so that a complete record is obtained of all works performed under the contract.

All measurements and levels shall be taken jointly by the Engineer-in-charge or his authorized representative and by the contractor or his authorized representative from time to time during the progress of the work and such measurements shall be signed and dated by the Engineer-in-charge and the contractor or their representatives in token of their acceptance. If the contractor objects to any of the measurements recorded, a note shall be made to that effect with reason and signed by both the parties.

If for any reason the contractor or his authorized representative is not available and the work of recording measurements is suspended by the Engineer-in-charge or his representative, the Engineer-in-charge and the Institute shall not entertain any claim from contractor for any loss or damages on this account. If the contractor or his authorized representative does not remain present at the time of such measurements after the contractor or his authorized representative has been given a notice in writing three (3) days in advance or fails to countersign or to record objection within a week from the date of the measurement, then such measurements recorded in his absence by the Engineer-in-charge or his representative shall be deemed to be accepted by the contractor.

The contractor shall, without extra charge, provide all assistance with every appliance, labour and other things necessary for measurements and recording levels.

Except where any general or detailed description of the work expressly shows to the contrary, measurements shall be taken in accordance with the procedure set forth in the specifications notwithstanding any provisions in the relevant Standard Method of measurement or any general or local custom. In the case of items which are not covered by specifications, measurements shall be taken in accordance with the relevant standard method of measurement issued by the Bureau of Indian Standards and if for any item no such standard is available, then a mutually agreed method shall be followed.

The contractor shall give, not less than seven days' notice to the Engineer-in-Charge or his authorized representative in-charge of the work, before covering up or otherwise placing beyond the reach of measurement any work in order that the same may be measured and correct dimensions thereof be taken before the same is covered up or placed beyond the reach of measurement and shall not cover up and place beyond reach of

measurement any work without consent in writing of the Engineer-in-charge or his authorized representative in-charge of the work who shall within the aforesaid period of seven days inspect the work, and if any work shall be covered up or placed beyond the reach of measurements without such notice having been given or the Engineer-in-charge's consent being obtained in writing, the same shall be uncovered at the Contractor's expense or in default thereof no payment or allowance shall be made for such work or the materials with which the same was executed.

Engineer-in-charge or his authorized representative may cause either themselves or through another officer of the Institute to check the measurements recorded jointly or otherwise as aforesaid and all provisions stipulated herein above shall be applicable to such checking of measurements or levels.

It is also a term of this contract that recording of measurements of any item of work in the measurement book and /or its payment in the interim, on account or final bill shall not be considered as conclusive evidence as to the sufficiency of any work or material to which it relates nor shall it relieve the contractor from liabilities from any over measurement or defects noticed till completion of the defect's liability period.

CLAUSE 6A
COMPUTERIZED MEASUREMENT BOOK

Engineer-in-charge shall, except as otherwise provided, ascertain and determine by measurement the value of work done in accordance with the contract.

All measurements of all items having financial value shall be entered by the contractor and compiled in the shape of the Computerized Measurement Book having pages of A04 size as per the format of the Institute so that a complete record is obtained of all the items of works performed under the contract.

All such measurements and levels recorded by the contractor or his authorized representative from time to time, during the progress of the work shall be got checked by the contractor from the Engineer-in-charge or his authorized representative as per interval or programme fixed in consultation with Engineer-in-charge or his authorized representative. After the necessary corrections made by the Engineer-in-charge, the measurement sheets shall be returned to the contractor for incorporating the corrections and for resubmission to the Engineer-in-charge for the dated signature by the Engineer-in- charge and the contractor or their representatives in token of their acceptance.

Whenever bill is due for payment, the contractor would initially submit draft computerized measurement sheets and these measurements would be got checked/ test checked from the Engineer-in-charge and /or his authorized representative. The contractor will, thereafter, incorporate such changes as may be done during these checks/test checks in his draft computerized measurements, and submit to the Institute a computerized measurement book, duly bound, and with its pages machine numbered. The Engineer-in- charge and/or his authorized representative would thereafter check this MB, and record the necessary certificates for their checks/test checks.

The final, fair, computerized measurement book given by the contractor, duly bound, with its pages machine numbered, should be 100% correct, and no cutting or over writing in the measurements would thereafter be allowed. If at all any error is noticed, the contractor shall have to submit a fresh computerized MB with its pages duly machine numbered and bound after getting the earlier MB cancelled by the Institute. Thereafter, the MB shall be taken in the Divisional Office records, and allotted a number as per the Register of Computerized MBs. This should be done before the corresponding bill is submitted to the Division Office for payment. The contractor shall submit two spare copies of such computerized MBs for the purpose of reference and record by the various officers of the Institute.

The contractor shall also submit to the Institute separately his computerized Abstract of Cost and bill based on these measurements, duly bound, and its pages machine numbered along with two spare copies of the `bill'. Thereafter, this bill will be processed by Division Office and allotted a number as per the computerized record in the same way as done for the measurement book meant for measurements.

The contractor shall, without extra charge, provide all assistance with every appliance, labour and other things necessary for checking of measurements/levels by the Engineer-in- charge or his representative.

Except where any general or detailed description of the work expressly shows to the contrary, measurements shall be taken in accordance with the procedure set forth in the specifications not withstanding any provision in the relevant Standard Method of measurement or any general or local custom. In the case of items which are not covered by specifications, measurement shall be taken in accordance with the relevant standard method of measurement issued by the Bureau of Indian Standards and if for any item no such standard is available, then a mutually agreed method shall be followed.

The contractor shall give not less than seven days' notice to the

Engineer-in-charge orhis authorized representative in charge of the work before covering up or otherwise placing beyond the reach of checking and /or test checking the measurement of any work in order that the same may be checked and /or test checked and correct dimensions thereof be taken before the same is covered up or placed beyond the reach of checking and /or test checking measurement and shall not cover up and place beyond reach of measurement any work without consent in writing of the Engineer-in-charge or his authorized representative in- charge of the work who shall within the aforesaid period of seven days inspect the work, and ifany work shall be covered or placed beyond the reach of checking and/or test checking measurements without such notice having been given or the Engineer-in-charge's consent being obtained in writing the same shall be uncovered at the Contractor's expense, or default thereof no payment or allowance shall be made for such work or the materials with which the same was executed.

Engineer-in-charge or his authorized representative may cause either themselves or through another officer of the Institute to check the measurements recorded by contractor andall provisions stipulated herein above shall be applicable to such checking of measurements or levels.

It is also a term of this contract that checking and/or test checking the measurements of any item of work in the measurement book and/or its payment in the interim, on account of final bill shall not be considered as conclusive evidence as to the sufficiency of any work or material to which it relates nor shall it relieve the contractor from liabilities from any over measurement or defects noticed till completion of the defect's liability period.

CLAUSE 7 PAYMENT

Payments will be made through monthly running account bills based on the works executed on the basis of recorded measurements. The running account bills shall be submitted by the contractor for the works executed on the basis of recorded measurements on the format of the Department in triplicate on or before the date of every month fixed by Engineer-In-Charge.

Engineer-In-Charge shall arrange to have the bills verified by taking or causing to be taken wherever required the requisite measurement of the work. Payments on account of the amounts admissible shall be made by the Engineer-In-Charge certifying the sum to which contractor is considered entitled by way of running account bill at such rates decided by the Engineer-In-Charge.

The amount admissible shall be paid by tenth working day after the day of presentation of the bill by the contractor, together with all details. In the event of failure of the contractor to submit the bill, Engineer-In-Charge shall prepare or cause to be prepared such bill in which event no claim or what so ever on delay in payments shall be entertained.

However, in respect of i) AC works and ii) Mechanical works viz., cranes, Monorail, special conveyor system, sliding doors, platforms, passenger/service lifts, compressed air facility, hot water guarantors, rotors, flash mixers and agitators etc., a) 76.5% pro-rata payment will be made on delivery of equipment and subject to acceptance by conducting necessary tests.
b) 13.5% pro-rata payment on completion of installation and c) 10.0% on completion of testing, commissioning and handing over.

All payments made against running accounts will be treated as intermediate advances which will finally be adjusted in the final bill, prepared on completion of the work and shall not preclude the requiring of bad, unsound and imperfect or unskilled work to be rejected, removed, taken away and reconstructed or re-erected.

Any certificate given by the Engineer- in-Charge relating to the work done or materials delivered forming part of such payment, may be modified or corrected by any subsequent such certificate(s) or by the final certificate and shall not by itself be conclusive evidence that any work or materials to which it relates is/are in accordance with the contract and specifications. Any such interim payment, or any part thereof shall not in any respect conclude, determine or affect in any way powers of the Engineer-in-Charge under the contract or any of such payments be treated as final settlement and adjustment of accounts or in any way vary or affect the contract.

Pending consideration of extension of date of completion, interim payments shall continue to be made as herein provided without prejudice to the right of the department to take action under the terms of this contract for delay in the completion of work, if the extension of date of completion is not granted by the competent authority.

Engineer-in-Charge in his sole discretion to the effect that the work has been completed upto the level in question make interim advance payments without detailed measurements for work done (other than foundations, items to be covered under finishing items) up to lintel level (including sunshade etc.) and slab level, for each floor working out at 75% of the assessed value. The advance payments so allowed shall be adjusted in the subsequent interim bill by taking detailed measurements thereof.

Engineer-in-Charge in his sole discretion to the effect that the work has been completed up to the level in question make interim advance payments without detailed measurements for work done (other than foundations, items to be covered under finishing items) up to lintel level (including sunshade etc.) and slab level, for each floor working out at 75% of the assessed value.

The advance payments so allowed shall be adjusted in the subsequent interim bill by taking detailed measurements thereof.

CLAUSE 8
COMPLETION CERTIFICATE

Within ten days of the completion of work, the Contractor shall give notice of such completion to the Engineer-in-charge and within ten days of receipt of such notice the Engineer-in- charge shall inspect the work and if there is no defect in the work, shall furnish the Contractor with a certificate of completion, otherwise a provisional certificate of completion indicating the defects (a) to be rectified by the Contractor and/or (b) for which payment will be made at reduced rates shall be issued but no such certificate of completion provisional or otherwise shall be issued nor shall the work be considered to be complete until the Contractor shall have removed from the premises on which the work shall be executed all scaffolding surplus material and rubbish and all huts and sanitary arrangements required for this or their work people on the site in connection with execution of works shall have been erected or constructed by the Contractor and cleaned off the dirt from all the wood works, doors, windows, walls, floors or which other parts of any building in upon or about the work is to be executed or any of which he may had possession for the purpose of execution thereof and not until the work shall have been measured by the Engineer-in-charge. If the Contractor shall fail to comply with requirements of this clause as to removal of scaffoldings, surplus materials and rubbish and all huts and sanitary arrangements as aforesaid and cleaning ofdirt on or before the date fixed for the completion of the work, the Engineer-in-charge may, at the expense of the Contractor remove such scaffolding, surplus materials and rubbish etc., and dispose of the same as he thinks fit clean of such dirt as aforesaid, and the Contractor shall forthwith pay the amount of all expense so incurred and shall have no claim in respect of any such scaffolding or surplus materials as aforesaid except for any sum actually realized by the sale thereof.

CLAUSE 8A
CONTRACTOR TO KEEP SITE CLEAN

When the annual repair and maintenance work is carried out, the

splashes and droppings from whitewashing, color washing, painting etc., on walls, floors, doors, windows etc., shall be removed and the surface cleared simultaneously with the completion of these items of work in the individual rooms, quarters or premises etc., where the work is done without waiting for the actual completion of all the other items or work in the contract. In case the Contractor fails to comply with requirement of this clause, the Engineer-in-charge shall have the right to get this work done at the cost of the Contractor either Institute ally or through another agency. Before taking such action, the Engineer-in-charge shall give ten days' notice in writing to the Contractor.

CLAUSE 8B

COMPLETION PLAN

The contractor shall submit completion plan for all services viz., water, sewerage, drainage, Electrical, A/c works etc., within thirty days of the completion of the work.

In case, the contractor fails to submit the completion plan as aforesaid, she/ he shall be liable to pay a sum equivalent to 2.5% of the value of the work subject to a ceiling of Rs.15,000(Rs. Fifteen thousand only) as may be fixed by the EIC concerned and in this respect the decision of the EIC shall be final and binding on the contractor.

CLAUSE 9
PAYMENT OF FINAL BILL

The final bill shall be submitted by the contractor in the same manner as specified in interim bills within three months of physical completion of the work or within one month of the date of the final certificate of completion furnished by the Engineer-in-Charge whichever is earlier. No further claims shall be made by the contractor after submission of the final bill and these shall be deemed to have been waived and extinguished. Payments of those items of the bill in respect of which there is no dispute and of items in dispute, for quantities and rates as approved by Engineer-in-Charge, will, as far as possible-be made within the period specified herein under, the period being reckoned from the date of receipt of the bill by the Engineer-in- Charge or his authorized persons, complete with account of materials issued by the Department and dismantled materials.

If the Tendered value of work is,

up to Rs. 45 lakhs: 2 months.

more than Rs.45 lac& up to Rs.2.5 Cr: 3 months.exceeds Rs. 2.5 Cr: 6 months.

CLAUSE 9A
PAYMENT OF CONTRACTOR'S BILL TO BANKS

Payments due to the Contractor may, if so desired by him, be made to his bank instead ofdirect to him provided that Contractor furnishes to the Engineer-in-charge;

1) an authorization in the form of legally valid documents such as a power of attorney conferringauthority on the bank to receive payment and

2) His own acceptance of the correctness of the account made out as being due to him by Institute or his signature on the bill or other claims preferred against Institute before settlement by the Engineer-in-charge of the account or claim by payment to the Bank. While the receipt given by such bank shall constitute a full and sufficient discharge for the payment, the Contractor should whenever possible present his bills duly receipted and discharged through his bankers.

Nothing herein contained shall operate to create in favor of the bank any rights or equitiesvis-à-vis the Director, Raman Research Institute.

CLAUSE 10
MATERIALS SUPPLIED BY THE INSTITUTE DELETED

CLAUSE 10A
MATERIALS TO BE PROVIDED BY THE CONTRACTOR

The contractor shall, at his own expense, provide all materials, required for the work other than those which are stipulated to be supplied by the Government.

The contractor shall, at his own expense and without delay, supply to the Engineer-in-charge samples of materials to be used on the work and shall get these approved in advance. All such materials to be provided by the Contractor shall be in conformity with the specifications laid down or referred to in the contract. The contractor shall, if requested by the Engineer-in-charge furnish proof, to the satisfaction of the Engineer-in-charge that the materials so comply.

The Engineer-in-charge shall within thirty days of supply of samples or within such further period as he may require intimate to the Contractor in writing whether samples are

approved by him or not. If samples are not approved, the Contractor shall forthwith arrange to supply to the Engineer-in-charge for his approval, fresh samples complying with the specifications laid down in the contract. When materials are required to be tested in accordance with specifications, approval of the Engineer-in-charge shall be issued after the test results are received.

The Contractor shall at his risk and cost submit the samples of materials to be tested or analyzed and shall not make use of or incorporate in the work any materials represented by the samples until the required tests or analysis have been made and materials finally accepted by the Engineer-in-charge. The Contractor shall not be eligible for any claim or compensation either arising out of any delay in the work or due to any corrective measures required to be taken on account of and as a result of testing of materials.

The contractor shall, at his risk and cost, make all arrangements and shall provide all facilities that the Engineer-in-charge may require for collecting, and preparing the required number of samples of such tests at such time and to such place or places as may be directed by the Engineer-in-charge and bear all charges and cost of testing unless specifically provided for otherwise elsewhere in the contract or specifications. The Engineer- in-charge or his authorized representative shall at all times have access to the works and to all workshops and places where work is being prepared or from where materials, manufactured articles or machinery are being obtained for the works and the contractor shall afford every facility and every assistance in obtaining the right to such access.

The Engineer-in-charge shall have full powers to require the removal from the premises all materials which in his opinion are not in accordance with the specifications and in case of default, the Engineer-in-charge shall be at liberty to employ at the expense of the contractor, other persons to remove the same without being answerable or accountable for any loss or damage that may happen or arise to such materials. The Engineer-in-charge shall also have full powers to require other proper materials to be substituted thereof and in case of default, the Engineer-in-charge may cause the same to be supplied and all costs which may attend such removal and substitution shall be borne by the Contractor.

The contractor shall at his own expense, provide a material testing lab at the site for conducting routine field tests. The lab shall be equipped at least with the testing equipment as specified in schedule F.

CLAUSE 10B (i)

SECURED ADVANCE

The contractor, on signing an indenture in the form to be specified by the Engineer-in- charge, shall be entitled to be paid during the progress of the execution of the work up to 90% of the assessed value of any materials which are in the opinion of the Engineer-in- charge non-perishable, non-fragile and non-combustible and are in accordance with the contract and which have been brought on the site in connection therewith and are

adequately stored and/ or protected against damage by weather or other causes but which have not at the time of advance been incorporated in the works. When materials on account of which an advance has been made under this sub-clause are incorporated in the work, the amount of such advance shall be recovered/ deducted from the next payment made under any of the clause or clauses of this contract.

Such secured advance shall also be payable on other items of perishable nature, fragile and combustible with the approval of the Engineer-in-charge, provided the contractor provides a comprehensive insurance cover for the full cost of such materials. The decision of the Engineer-in-charge shall be final and binding on the contractor in this matter. No secured advance shall however, be paid on high-risk materials such as ordinary glass, sand, petrol, diesel, etc.

CLAUSE 10B (ii) – DELETED

CLAUSE 10 C– DELETED

CLAUSE 10 D

DISMANTLED MATERIALS ARE GOVERNMENT PROPERTY

The Contractor shall treat all materials obtained during dismantling of a structure, excavation of the site for a work etc., as Government's property and such materials shall be disposed off to the best advantage of Government according to instructions in writing issued by the Engineer-in-charge.

CLAUSE 10E – DELETED

CLAUSE11

WORK TO BE EXECUTED IN ACCORDANCE WITH SPECIFICATIONS, DRAWINGS, ORDERS, ETC.,

The contractor shall execute the whole and every part of the work in the most substantial and workmanlike manner both as regards materials and otherwise in every respect in strict accordance with the specifications. The contractor shall also conform exactly, fully and faithfully to the design, drawings and instructions in writing in respect of the work signed by the Engineer-in-Charge and the contractor shall be furnished free of charge one copy of the contract documents together with specifications, designs, drawings and instructions as are not included in the standard specifications of the Institute or in Central Public Works Institute or in any Bureau of Indian Standard or any other, published standard or code or, Schedule of Rates or any other printed publication referred to elsewhere in the contract.

The contractor shall comply with the provisions of the contract and with the care and diligence execute and maintain the works and provide all labour and materials, tools and plants including for measurements and supervision of all works, structural plans and other things of temporary or permanent nature required for such execution and maintenance in so far as the necessity for providing these, is specified or is reasonably inferred from the contract. The Contractor shall take full responsibility for adequacy, suitability and safety of all the works and methods of construction.

CLAUSE 11A

ACTION WHERE NO SPECIFICATION

In the case of any class of work for which there is no Institute specifications such work shall be carried out generally in accordance with CPWD specification and if there are no details of CPWD specification book then it shall be executed as per Bureau of Indian Standard specification. In case there is no such specification in Bureau of Indian Standards the work shall be carried out in all respects in accordance with the instruction and requirement of the Engineer-in-charge.

CLAUSE 12

DEVIATIONS/ VARIATIONS E TENT AND PRICING

The Engineer-in-charge shall have power (i) to make alteration in, omissions from, additions to, or substitutions for the original

specifications, drawings, designs and instructions that may appear to him to be necessary or advisable during the progress of the work, and (ii) to omit a part of the work(s) in case of non-availability of a portion of the site or for any other reasonsand the contractor shall be bound to carry out the works in accordance with any instructions given to him in writing signed by the Engineer-in-charge and such alterations, omissions, additions or substitutions shall form part of the contract as if originally provided therein and any altered, additional or substituted work which the contractor may be directed to do in the manner specified above as part of the works, shall

be carried out by the contractor on the same conditions in all respects including price on which he agreed to do the main work except as hereafter provided:

12.1 : The time for completion of the works shall, in the event of any deviations resulting in additional cost over the tendered value sum being ordered, be extended, if requested by the contractor, as follows:

i) In the proportion which the additional cost of the altered, additional or substitutedwork, bears to the original tendered value plus.

ii) 25% of the time calculated in (i) above or such further additional time as may be considered reasonable by the Engineer-in-charge.

12.2 : Extra items and pricing

A. For major works:

In the case of Extra items (items that are completely new, and are in addition to the items contained in the contract) , the contractor may within 15 days of receipt of order or occurrence of the item(s), claim rate supported by proper analysis, for the work and the Engineer-in-charge shall within prescribed time limit of the receipt of the claims supported by analysis after giving consideration to the analysis of the rates submitted by the contractor, determine the rates on the basis of market rates and the contractor shall be paid in accordance with the rates so determined.

***12.3* : Substituted item, pricing**

A. For major/ capital works:

In the case of substituted items (items that are taken up with partial

substitution are in lieu of items of work in the contract), the rate for the agreement item (to be substituted) and substituted item shall also be determined in the manner as mentioned in the following para.

i) If the market rate for the substituted item so determined is more than the market rate of the agreement item (to be substituted), the rate payable to the contractor for the substituted item shall be the rate for the agreement item (to be substituted) so increased to the extent of the difference between the market rates of substituted item and the agreement item (to be substituted).

ii) If the market rate for the substituted item so determined is less than the market rate of the agreement item (to be substituted), the rate payable to the contractor for the substituted item shall be the rate for the agreement item (to be substituted) so decreased to the extent of the difference between the market rates of substituted item and the agreement item (to be substituted).

12.4 : Deviated quantities, pricing

A. For major/ capital works:

In the case of contract items, substituted items, contract cum substituted items, which exceed the limits as below, the contractor may within fifteen days of receipt of order of occurrence of the excess, claim revision of the rates, supported by proper analysis for the work in excess of the above mentioned limits, provided that if the rates so claimed are in excess of the rates specified in the schedule of quantities, the Engineer-in-charge shall within prescribed time limit of receipt of the claims supported by analysis, after giving consideration to the analysis of the rates submitted by the contractor, determine the rates on the basis of market rates and the contractor shall be paid in accordance with the rates so determined.

Prescribed time limits are as under:

If the Tendered value of work is

up to Rs.45 lac : 30 days.

More than Rs.45 lac and up to Rs. 2.5 Cr : 45days.

Exceeds Rs. 2.5 Cr : 60days.

A. For major/ capital works:

The provisions of the preceding paragraph shall also apply to the decrease in the rates of items for the work in excess of limits laid down in Schedule ' F ',

and the Engineer-in- charge shall after giving notice to the contractor within one month of occurrence of the excess and after taking into consideration any reply received from him within fifteen days of the receipt of the notice, revise the rates for the work in question within one month of the expiry of the said period of fifteen days having regard to the market rates.

12.6:

The contractor shall send to the Engineer-in-charge once in a month, an up to-date account giving complete details of all claims for additional payments to which the contractor may consider himself entitled and of all additional work ordered by the Engineer-in-charge which he has executed during the preceding quarter failing which the contractor shall be deemed to have waived his right. However, the Administrative Officer, RRI may authorize consideration of such claims on merits.

12.7:

Any operation incidental for proper execution of the item included in the Schedule of quantities or in the Schedule of rates mentioned above, whether or not, specifically indicated in the description of the item and the relevant specifications, shall be deemed to be included in the rates quoted by the tenderer or the rate given in the said schedule of rates as the case may be. Nothing extra shall be admissible for such operations.

CLAUSE 13
FORE CLOSURE OF CONTRACT DUE TO ABANDONMENT OR REDUCTION IN SCOPE OF WORK

If at any time after acceptance of the tender, Engineer-in-Charge shall decide to abandon or reduce the scope of the works for any reason whatsoever and hence not require the whole or any part of the works to be carried out, the Engineer-in-Charge shall give notice in writing to that effect to the contractor and the contractor shall act accordingly in the matter. The contractor shall have no claim to any payment of compensation or otherwise whatsoever, on account of any profit or advantage which he might have derived from the execution of the works in full but which he did not derive in consequence of the foreclosure of the whole or part of the works.

The contractor shall be paid at contract rates, full amount for works executed at site and, in addition, a reasonable amount as certified by the Engineer-in-Charge for the items hereunder mentioned which could not be utilized on the work to the full extent in view of the foreclosure;

(i) Any expenditure incurred on preliminary site work, e.g., temporary access roads, temporary labor huts, staff quarters and site office, storage accommodation and water storage tanks.

(ii) Government/Department shall have the option to take over contractor's materials or any part thereof either brought to site or of which the contractor is legally bound to accept delivery from suppliers (for incorporation in or incidental to the work) provided, however Government/ Department shall be bound to take over the materials or such portions thereof as the contractor does not desire to retain. For materials taken over or to be taken over by Government/ Department, cost of such materials as detailed by Engineer-in- Charge shall be paid. The cost shall, however, take into account purchase price, cost of transportation and deterioration or damage which may have been caused to materials whilst in the custody of the contractor.

(iii) If any materials supplied by Government/ Department are rendered surplus, the same except normal wastage shall be returned by the contractor to Government/ Department at rates not exceeding those at which these were originally issued, less allowance for any deterioration or damage which may have been caused whilst the materials were in the custody of the contractor. In addition, cost of transporting such materials from site to Government/ Department stores, if so, required by Government/ Department, shall be paid.

(iv) Reasonable compensation for transfer of T & P from site to contractor's permanent stores or to his other works, whichever is less. If T & P are not transported to either of the said places, no cost of transportation shall be payable.

(v) Reasonable compensation for repatriation of contractor's site staff and imported labour to the extent necessary.

The contractor shall, if required by the Engineer- in-Charge, furnish to him, books of account, wage books, time sheets and other relevant documents and evidence as may be necessary to enable him to certify the reasonable amount payable under this condition.

The reasonable number of items on (i), (iv) and (v) above shall not be in excess of 2% of the cost of the work remaining incomplete on the date of closure, i.e., total stipulated cost of the work as per accepted tender less the cost of work actually executed under the contract and less the cost of contractor's materials at site taken over by the Government/ Department as per item (ii) above. Provided always that against any payments due to the contractor on this account or otherwise, the Engineer-in-Charge shall be entitled to recover or be credited with any outstanding balances due from the contractor for advance paid in respect of any tool, plants and materials and any other sums which at the date of termination were recoverable by the Government/ Department from the contractor under the terms of the contract.

CLA USE 14- DELETED

CLAUSE 15 -DELETED

CLAUSE 16
ACTION IN CASE WORK NOT DONE AS PER SPECIFICATIONS

All works under or in course of execution or executed in pursuance of the contract, shall atall times be open and accessible to the inspection and supervision of the Engineer-in- charge, his authorized subordinates in charge of the work and all the superior officers, officer of the Quality Assurance unit of the Institute or any organization engaged by the Institute for Quality Assurance and of the Chief Technical Examiner's office and the contractorshall, at all times, during the usual working hours and at all other times at which reasonable notice of the visit of such officers has been given to the contractor, either himself be present to receive orders and instructions or have a responsible agent duly accredited in writing, present for that purpose. Orders given to the contractor's agent shall be considered to have the same force as if they had been given to the contractor himself.

If it shall appear to the Engineer-in-charge or his authorized subordinate in-charge of the work or to the Authority in charge of Quality Assurance or his subordinate officers or the officers of the organization engaged by the Institute for Quality Assurance or to the Chief Technical Examiner or his subordinate officers that any work has been executed with unsound, imperfect, or unskillful workmanship, or with materials or articles provided by him for the execution of the work which are unsound or of a quality inferior to that contracted or otherwise not in accordance with the contract, the contractor shall, on demand in writing which shall be made within twelve months (six months in the case of work costing Rs.10 lakhs and below except road work) of the completion of the work from the Engineer-in- charge specifying the work, materials or articles complained of notwithstanding that the same may have been passed, certified and paid for forthwith rectify, or remove and reconstruct the work so specified in whole or in part, as the case may require or as the case may be, remove the materials or articles so specified and provide other proper and suitable materialsor articles at his own charge and cost. In the event of the failing to do so within a period specified by the Engineer-in-charge in his demand aforesaid, then the contractor shall be liable to pay compensation at the same rate as under clause 2 of the contract (for non- completion of the work in time) for this default.

In such case the Engineer-in-charge may not accept the item of work at the rate applicable under the contract but may accept such items at reduced rates as the authority specified in Schedule `F' may consider

reasonable during the preparation, of on account bills or final bill if the item is so acceptable without detriment to the safety and utility of the item and the structure or he may reject the work outright without any payment and/or get it and other connected and incidental items rectified, or removed and re-executed at the risk and cost of the contractor. Decision of the Engineer-in-charge to be conveyed in writing in respect of the same will be final and binding on the contractor.

CLAUSE 16A
NOTICE TO BE GIVEN BEFORE COVERING UP

The Contractor shall give not less than seven days' notice in writing to the Engineer-in- chargeor his authorized subordinate in charge of the work before covering up or otherwise placing beyond the reach of measurement any work in order that the same may be measured and correct dimensions thereof be taken before the same is covered up or placed beyond the reach of measurement and shall not cover up and placed beyond the reach of measurement any work without the consent in writing of the Engineer-in-charge or his authorized subordinate in charge of the work shall within the aforesaid period of seven days inspect the work and if any work shall be covered up or placed beyond the reach of measurement without such notice having been given or the Engineer-in-charge's consent be obtained the same shall be uncovered at the Contractor's expense, or in default thereof no payment or allowance shall be made for such work or the materials with which the same was executed.

CLAUSE 17A
CONTRACTOR LIABLE FOR DAMAGES, DEFECTS DURING MAINTENANCE PERIOD

If the Contractor or his working people shall break, deface, injure or destroy any part of a building in which they may be working or any buildings, road, kerbs, fence, enclosure, water pipes, cables, drains, electric and telephone posts or wire, trees, grass or grass land or cultivated ground contiguous to the premises on which the work or any part of it is being executed, or if any damage shall happen to the work while in progress from any cause whatever or if any defects shrinkage or other faults appear in the work within twelve months(6 months in the case of any work other than road work costing Rs,10,00,000/- and below) after a certificate of final or otherwise of its completion shall have been given by the Engineer-in-charge as aforesaid arising out of defective or improper materials or workmanship, the Contractor shall after receipt of notice in writing in that behalf make the same good at his own expense, or in default the Engineer-in-charge may cause the

same to be made good by other workmen and deduct the expense (of which the certificate of the Engineer-in-charge shall be final) from any sums that may then, or at any time thereafter become due to the Contractor, or from his Security Deposit or the proceeds of sale thereof, or of a sufficient portion thereof the Security Deposit of the Contractor shall not be refunded before the expiry of twelve calendar months after the issue of the certificate of final or otherwise of completion of work, or till the final bill has been prepared and passed whichever is later.

Engineer-in-Charge shall give notice to the contractor of any defects before the end of the Defect Liability Period, which begins on the date of completion. The Defect Liability Period shall stand automatically extended for as long as defects remain to be rectified. Every time notice of defect is given, the contractor shall correct the notified defects within the period specified by Engineer-in-charge.

However, for contract exclusively for earth work or jungle clearance where defect liability period is not relevant, Security Deposit if any paid may be refunded along with payment of final bill subject to labour clearance vide Clause 45.

Further in case where the contract provides for completion in phases, the Engineer-in- charge at his discretion may allow part refund of Security Deposit after expiry of 12 months (6 months in case of any works other than road work costing Rs.10,00,000 and below) from the date of completion for each phase but not before the payment of final bill for the entire contract.

CLAUSE 17B
SPECIAL CONDITION ON TAKING INSURANCE POLICY FOR THE WHOLE WORKORDER VALUE BY THE CONTRACTORS'

As per Clause 17A of the Conditions of Contract, the Contractors' have to make good at their own expense the damages occurred due to any accident from any cause during the work in progress or nearing completion of the work. In order to fulfill this clause and also to take the responsibility of handing over the site to the full satisfaction of the Engineer-in-Charge and till the contractor gets the certificate or a letter of taking over the site facility/ building/works, the contractor shall be responsible to re-do the works damaged from any cause. For this purpose, the contractor shall insure the whole work the moment the work order is received and before agreement is signed for the entire work order value under contractor's all risk insurance policy [CAR]. The third-party liability and Cross-liability shall also be covered under the policy. The Contractors shall consult the insurance companies and also the principal employer i.e., the Engineer-in-Charge and take the

insurance policy for CAR. In case of any accidents during the work or nearing completion of the work [other than during the defect liability period for which Clause-17A is applicable], the Contractors are totally responsible to re-do the damages and hand over site in acceptable condition to the Engineer-in-Charge and await a letter from the Department that the site has been taken over. Till such time, the Contractors are responsible for all the damages from any cause.

Note: Contractor should also obtain insurance policy to cover all the laborers engaged in the work.

In the event of contractor failing to keep insurance alive, Department reserves right to take appropriate action including withholding the payments due to the Contactor.

CLAUSE 18

CONTRACTOR TO SUPPLY TOOLS AND PLANTS ETC.,

The Contractor shall supply and provide at his own cost all materials (except such special materials, if any as may in accordance with the contract be supplied from the Engineer-in- charge's stores) plant, tools, appliances, implements, ladders, cartage, tackle, scaffolding and temporary works requisite for the proper execution of the work, whether original, altered or substituted and whether included in the specification or other documents forming part of the contract or referred to in these conditions or not or which may be necessary for the purpose of satisfying or complying

with the requirements of the Engineer-in-charge as to any matters as to which under these conditions he is entitled to be satisfied or which he is entitled to require together with carriage thereof to and from the work.

The Contractor shall also supply without charge the requisite number of persons with the means and materials necessary for the purpose of setting out works and counting, weighing and assisting in the measurement or examination at any time and from time to time of the work or materials failing his so doing the same may be provided by the Engineer-in-charge at the expenses of the Contractor and the expense may be deducted from any money due to the Contractor under the contract or the proceeds of sale thereof or of a sufficient portion thereof.

CLAUSE 18A
RECOVERY OF COMPENSATION PAID TO WORKMEN

In every case which by virtue of the provisions of section 12 sub-section

(i) of the workman's compensation act, 1923, Institute is obliged to pay compensation to workmen employed bythe Contractor in execution of the work, Institute will recover from the Contractor the amountof the compensation so paid and without prejudice to the rights of Institute under section-12 sub-section (2) of the said act, Institute shall be at liberty to recover such amounts or any part thereof by deducting it from the security Deposit or from any sum due by the Institute to the contract whether under this contract or otherwise, Institute shall not be bound to contest any claim made against it under section 12, sub-section (1) of the said act except on the written requestof the Contractor and upon his giving to Institute full security for all costs for which Institute might become liable in Consequence of contesting such claim.

CLAUSE 18B
ENSURING PAYMENT AND AMENITIES TO WORKERS IF CONTRACTOR FAILS

In every case in which by virtue of the provisions of the contract Labour (Regulation and Abolition Act 1970) and of the Contract Labour Regulation and Abolition Central Rules, 1971, Institute is obliged to pay any amounts of wages to workman employed by the Contractor in execution of the works, or to incur any expenditure in providing welfare and health amenities required to be provided under the above said act and the rules under clause 19 or under the rules framed by Institute from to time for the protection of health and sanitary arrangements for workers employed by Institute Contractor, Institute will recover from the Contractor the amount of wages so paid or the amount of expenditure so incurred and without prejudice to the right of the Institute under section 20 sub- section (2) and section 21 sub-section (4) ofthe Contract Labour (R&A) act 1970Institute shall be at liberty to recover such amount or any part thereof by deducting it from any sum due by the Institute to the contractor whether under this agreement or otherwise Institute shall not be bound to contest any claim made against it under section 20 sub-section (1) and section 21 sub section (4) of the said Act except on the written request of the Contractor and upon his giving to the Institute full security for all costs for which Institute might become liable in contesting such claim.

CLAUSE 19
LABOUR LAWS/ SAFETY PROVISIONS TO BE COMPLIED BY THE CONTRACTOR

Contractor shall follow all laws, regulations and acts of Central/ State

Government and other statutory bodies relating to engaging labourers in work, wages and all related provisions and indemnify Institute against payment to be made under and for the observance of the said labour laws.

Engineer-in-Charge concerned shall have the right to deduct from the moneys due to the contractor, any sum required or estimated to be required for making good the loss suffered bya worker or workers by reason of non-fulfillment of any of the conditions of the contract for the benefit of the workers, non-payment of wages or of deductions made from his or their wages which are not justified by their terms of the contract or non-observance of the Regulations.

Further, contractor at his own expense shall arrange and comply with the safety provisions as per labor laws and health & sanitary arrangements for the workers as per the extent rules.

CLAUSE 20
MINIMUM WAGES ACT

Contractor shall comply with all the provisions of the Minimum Wages Act 1948, Contract Labour (Regulation and Abolition) act, 1970 and rules framed thereunder and other labour laws affecting Contract Labour that may be brought into force from time to time.

CLAUSE 21
WORK NOT TO BE SUBLET - ACTION IN CASE OF INSOLVANCY

The contract shall not be assigned or sublet without the written approval of the Engineer-in- charge and if the Contractor shall assign or sublet this contract or attempt to do so or become insolvent or commence any insolvency proceedings or make any composition with his creditors or attempt to do so or if any bribe gratuity, gift, loan, perquisite reward or advantage, pecuniary or otherwise shall either directly or indirectly be given, promised or offered by the Contractor or any of his employees or agents to any public officer or person in the employ of the Institute in any way relating to his Officer or Employment, or if any such officer or person shall become in any way directly or indirectly interested in the contract, the Engineer-in- charge may thereupon on behalf of the Director, Raman Research Institute shall have power to adopt any of the course specified in Clause 3 as he may best deem suited in the interest of Institute, in the event of any of those courses being adopted the consequences specified in thesaid clause 3 shall ensure.

CLAUSE 22
COMPENSATION PAYABLE ARE WITHOUT REFERNCE TO ACTUAL

LOSS OR DAMAGES

All sums payable by way of compensation under any of these conditions shall be considered as reasonable compensation to be applied to the use of Institute without reference to the actual loss or damage sustained and whether or not any damage shall have been sustained.

CLAUSE 23
CHANGE IN FIRM'S CONSTITUTION TO BE INTIMATED.

Where the Contractor is a partnership firm, the previous approval in writing of the Engineer-in- charge shall be obtained before any change is made in the constitution of the firm. Where the Contractor is an individual or a Hindu undivided family business concern such approval as aforesaid shall likewise be obtained before the Contractor enters into any partnership agreement where under the partnership firm would have the right to carry out the work hereby undertaken by the Contractor. If previous approval as aforesaid is not obtained, the contractor shall be deemed to have been assigned in contravention of clause 21 hereof and the same action may be taken and the same consequences shall ensure as provided in the said clause 21.

CLAUSE 24 - DELETED

CLAUSE 25
SETTLEMENT OF DISPUTES AND ARBITRATION

a) If any dispute or differences of any kind whatsoever were to arise between the Engineer-in-charge, RRI and the Contractor regarding the following matters namely.

i) The meaning of the specifications, designs, drawings and instructions herein before mentioned.

ii) The quality of workmanship or materials used on the work and

iii) Any other question, claim, right, matters, thing whatsoever in any way arising out of or relating to the contract, designs, drawings, specifications, estimates, instructions or orders, or those conditions or failure to execute the same whether arising during the progress of the work after the completion, termination or abandonment thereof, the dispute shall, in the first place be referred to the Administrative Officer, RRI who has Jurisdiction over the work specified in the contract with the details of claims, justification for the same with supporting documents such as analysis of rates, cash vouchers and other relevant particulars. The Administrative Officer, RRI shall within a period of sixty days from the date of being requested by the Contractor to do so or from the date of furnishing of required

particulars whichever is later shall give written notice of his decision to the contractor.

If the Administrative Officer, RRI fails to give notice of his decision within a period of 60 days from the date of receipt of (i) the Contractor's request in writing for settlement of dispute or difference as aforesaid or (ii) relevant particulars from the Contractor in support of his claims whichever is later. (OR)

If the decision of the Administrative Officer, RRI is not acceptable to the Contractor, he may approach the Director of RRI within a period of 15 days from the date of expiry of 60 days specified above. The Director of RRI shall within a period of further 90 days from the date of receipt of request from the contractor or from the date of receipt of relevant particulars from the contractor in support of claims whichever is later give notice of his decision (s) to the Contractor.

b) Subject to other forms of settlement hereinafter provided the Director of RRI decision in respect of every dispute or difference so referred shall be final and binding upon the Contractor. The said decision shall forthwith be given effect to and Contractor shall proceed with the execution of the work with all due diligence.

c) Remedy

1. When Director of RRI decision is not acceptable to Contractor OR
2. Director of RRI fails to give decision within 90 days.

In case the decision of the Director of RRI is not acceptable to the Contractor or Director of RRI fails to give decision within 90 days specified above, the Contractor may approach the Law court specified in Schedule 'F' for settlement of dispute after giving due written notice in this regard to the Director of RRI.

d) Whether the claim is referred to the Administrative Officer, RRI/ Director of RRI or to the Law Courts, as the case may be, the Contractor shall proceed to execute and complete the works with all due diligence pending settlement of the said dispute or differences.

Obligations of the Engineer-in-charge and Contractor shall remain unsettled during considerations of dispute.

e) The reference of any dispute or dispute (s) or difference(s) to Administrative Officer, RRI or the Director of RRI or the Law Court may proceed not withstanding that the work shall then be or be alleged to be complete provided always that the obligations of the Engineer-in-charge and the Contractor shall not be altered by reason of the said

dispute or difference being referred to Administrative Officer, RRI/ Director of RRI or the Law Court during the progress of the works.

CLAUSE 25A- DELETED

CLAUSE 26

PATENT RIGHTS

The Contractor shall fully indemnify the President of India against any action, claim or proceeding relating to infringement or use of any patent or design on any alleged patent or design right and shall pay any royalties which may be payable in respect of any article or part thereof included in the contract. In the event of any claims made under or action brought against Government in respect of such matters as aforesaid the Contractor shall be immediately notified thereof and the Contractor shall be at liberty, at his own expense, to settle any dispute or to conduct any litigation that may arise there from. Provided that the Contractor shall not be liable to indemnify the President of India if the infringement of the patent or design of any alleged patent or design right is the direct result of an order passed by the Engineer-in-charge in this behalf.

CLAUSE 27 – DELETED

CLAUSE 28 – RENUMBERED AS CLAUSE 11A

CLAUSE 29

WITHHOLDING AND LIEN IN RESPECT OF SUMS DUE FROM CONTRACTOR

(i) Whenever any claim or claims for payment of a sum of money arises out of or under the contract or against the contractor, the Engineer-in-Charge or the Institute shall beentitled to withhold and also have a lien to retain such sum or sums in whole or in part from the security, if any deposited by the contractor and for the purpose aforesaid, the Engineer-in-Charge or the Institute shall be entitled to withhold the security deposit, if any, furnished as the case may be and also have a lien over the same pending finalization or adjudication of any such claim. In the event of the security being insufficient to cover the claimed amount or amounts or if no security has been taken from the contractor, the Engineer-in-Charge or the

Institute shall be entitled towithhold and have a lien to retain to the extent of such claimed amount or amounts referred to above, from any sum or sums found payable or which may at any time thereafter become payable to the contractor under the same contract or any other contract with the Engineer-in-Charge of the Institute or any contracting person through the Engineer- in-Charge pending finalization of adjudication of any such claim.

It is an agreed term of the contract that the sum of money or moneys so withheld retained under the lien referred to above by the Engineer-in-charge or Institute will bekept withheld or retained as such by the Engineer-in-charge or Institute till the claim arising out of or under the contract is determined by the competent court and that the contractor will have no claim for interest or damages whatsoever on any account in respect of such withholding or retention under the lien referred to above and duly Notified as such to the contractor. For the purpose of this clause, where the contractor is a partnership firm or a limited company, the Engineer-in-charge or the Institute shall be entitled to withhold and also have a lien to retain towards such claimed amount or amounts in whole or in part from any sum found payable to any partner/limited company at the case may be, whether in his individual capacity or otherwise.

(ii) Institute shall have the right to cause an audit and Technical Examination of the work and the final bills of the Contractor including all supporting vouchers abstract etc., to be made after payment of the final bill and if as a result of such audit and Technical Examination any sum is found to have been over paid in respect of any work done by the Contractor under the contract or any work claimed by him to have been done by him under contract and found not to have been executed, the Contractor shall be liable to refund the amount of over payment and it shall be lawful for Institute to recover the same from him in the manner prescribed in sub clause (1) of this clause or in any other manner equally permissible and if it is found that the Contractor was paid less than what was due to him under the Contract in respect of any work executed by him under it, the amount of such under payment shall be duly paid by Institute to the contractor, without any interest thereon whatsoever.

Provided that the Institute shall not be entitled to recover any sum overpaid, nor the contractor shall be entitled to payment of any sum paid short where such payment has been agreed upon between the Engineer-in-Charge on the one hand and the contractor on the other under any term of the contract permitting payment for work after

assessment by the Engineer in Charge.

CLAUSE 29A
LIEN IN RESPECT OF CLAIMS IN OTHER CONTRACTS

Any sum of money due and payable to the Contractor (including Security Deposit returnable to him) under the contract may be withheld or retained by way of lien by the Engineer-in- charge or the Institute or any other contracting person or persons through Engineer-in-charge against any claim of the Engineer-in-charge or the Institute or such other person or persons in respect of payment of a sum of money arising out of or under any other contract made by the Contractor with the Engineer in charge or Institute or with such other person or persons.

It is an agreed term of the contract that the sum of the money so withheld or retained under this clause by the Engineer-in-charge or the Institute will be kept withheld or retained as such by the Engineer-in-charge or the Institute or till his claim arising out of the same contract or any other contract is either mutually settled or determined by the competent court, as the

case may be and that the contractor shall have no claim for interest or damages whatsoever on this account or on any other ground in respect of any sum of money withheld or retained under this clause and duly notified as such to the contractor.

CLAUSE 30
TERMINATION OF CONTRACT ON DEATH OF THE CONTRACTOR

Without prejudice to any of the rights or remedies under this contract, if the Contractor dies, the Engineer-in-charge on behalf of the Director, Raman Research Institute shall have the option of terminating the contract without compensation to the Contractor.

CLAUSE 31 WATER SUPPLY

The contractor(s) shall make his/their own arrangements for water required for the workand nothing extra will be paid for the same. This will be subject to the following conditions.

i) That the water used by the contractor(s) shall be fit for construction purposes to the satisfaction of the Engineer-in-Charge.

ii) The Engineer-in-Charge shall make alternative arrangements for supply of water at the risk and cost of contractor(s) if the arrangements made by the contractor(s) for procurement of water are in the opinion of the Engineer-in- Charge, unsatisfactory.

Institute Supply, if available:

Water, if available and separable, may be supplied to the contractor by Institute only at the single point subject to the following conditions: -

i) The water charges @ 1% shall be recovered on gross amount of the work done.

ii) The contractor(s) shall make his/their own arrangement of water connection and laying of pipelines from existing main of source of supply.

iii) The Institute do not guarantee to maintain uninterrupted supply of water and it will be incumbent on the contractor(s) to make alternative arrangements for water at his/their own cost in the event of any temporary break down in the Institute water main so that the progress of his/their work is not held up for want of water. No claim of damage or refund of water charges will be entertained on account of such break down.

Alternative water arrangements:

i) Where there is no piped water supply arrangement and the water is taken by the Contractor from the wells or hand pump constructed by the Institute no charge shall be recovered from the Contractor on that account. The Contractor shall, however, draw water at such hours of the day that it does not interfere with the normal use for which the hand pump and wells are intended. He will also be responsible for all damage and abnormal repairs arising out of his use, the cost of which shall be recoverable from him. The Engineer-in-charge shall be the final authority to determine the cost recoverable from the Contractor on this account.

ii) The Contractor shall be allowed to construct temporary wells in Institute land for taking water for construction purposes only after he has got permission of the Engineer-in- charge in writing. No charges shall be recovered from the Contractor on this account, but the Contractor shall be required to provide necessary safety arrangements to avoid any accidents or damage to adjacent buildings, roads and service lines. He shall also be responsible, for any accidents or damage caused due to construction and subsequent maintenance of the wells and shall restore the ground to its original

condition after the wells are dismantled on completion of the work.

CLAUSE 32 ELECTRICITY

Electricity, if available in the premises and separable, may be provided to the contractor by Institute only at the single point subject to the following conditions: -

i) The Contractor has to make his own arrangement to tap Electricity from a 3 phase/ single phase supply from location decided by Engineer-in-charge. Electricity supply will be made available only on metered basis. Electric charges will be recovered at actuals.

ii) In all cases where/when the energy meter is not installed, defective energy meter is not replaced or not rectified immediately, the consumption charges towards electricity will be recovered on the basis of the total wattage of the load multiplied by the number of hours utilized. In all such cases the Contractor shall maintain a log book indicating wattage of the load and hours of consumption and get the same attested by Engineer- in-charge at appropriate time without fail. The decision of Engineer-in-charge in the matter shall be final.

Note: Please refer Guide lines for temporary power supply at site and general safety procedures, attached.

CLAUSE 33
RETURN OF INSTITUTE SURPLUS MATERIALS TO INSTITUTE

Not with standing anything contained to the contrary in any or all the clauses of this contract where any materials for the execution of the contract are procured with the assistance of Government either by issue from Government stocks or purchase under orders made or permits or licenses issued by the Government the Contractor shall hold the said material as trustee for Government and use such materials economically and solely for the purpose of the contract and not dispose of them without the permission of the Government and return, if required by Engineer-in-charge all surplus, serviceable materials that may be left with him after the completion of the contract or at its termination for any reason whatsoever on being paid or credited such price as the Engineer-in-charge shall determine having due regard to the condition of the material. The price allowed to the Contractor, however, shall not

exceed the amount charged to him excluding the storage charges, if any. The contractor shall also not be entitled to cartage and incidental charges for returning the surplus materials from and to thestores where from they were issued. The decision of Engineer-in-charge shall be final and conclusive.

In the event of breach of aforesaid conditions, the contractor shall in addition tothrowing himself open to action for contravention of the terms of licenses or permits and/or for criminal breach of trust, be liable to compensate the Government for all moneys, advantages or profits resulting or which in the usual course would have resulted to him by reason of such breach.

CLAUSE 34 – DELETED

CLAUSE 35 - DELETED

CLAUSE 36

EMPLOYMENT OF GRADUATE/ DIPLOMA ENGINEERS

Contractors Superintendence, Supervision, Technical Staff & Employees

(i) The contractor shall provide all necessary superintendence during execution of the work and all along thereafter as may be necessary for proper fulfilling of the obligations under the contract.

The contractor shall immediately after receiving letter of acceptance of the tender and before commencement of the work, intimate in writing to the Engineer-in-Charge, the name(s), qualifications, experience, age, address(s) and other particulars along with certificates, of the principal technical representative to be in charge of the work and other technical representative(s) who will be supervising the work. Minimum requirement of such technical representative(s) and their qualifications and experience shall not be lower than specified in Schedule 'F'. The Engineer-in-Charge shall within 3 days of receipt of such communication intimate in writing his approval or otherwise of such a representative(s) to the contractor. Any such approval may at any time be withdrawn and in case of such withdrawal, the contractor shall appoint another such representative(s) according to the

provisions of this clause. Decision of the tender accepting authority shall be final and binding on the contractor in this respect. Such a principal technical representative andother technical representative(s) shall be appointed by the contractor soon after receipt of the approval from Engineer-in-charge and shall be available at site before start of work.

All the provisions applicable to the principal technical representative under the Clause will also be applicable to other technical representative(s). The principal technical representative and other technical representative (s) shall be present at the site of work for supervision at all times when any construction activity is in progress and also present himself/themselves, as required, to the Engineer-in-Charge and/or his designated representative to take instructions. Instructions given to the principal technical representative or other technical representative(s) shall be deemed to have the same force as if these have been given to the contractor. The principal technical representative and other technical representative(s) shall be actually available the decision of the Engineer-in- Charge as recorded in the site order book and measurement recorded checked/test checked in Measurement Books shall be final and binding on the contractor.

Further if the contractor fails to appoint suitable technical Principal technical representative and/or other technical representative(s) and if such appointed persons are not effectively present or are absent by more than two days without duly approved substitute or do not discharge their responsibilities satisfactorily, the Engineer-in-Charge shall have full powers to suspend the execution of the work until such date as suitable other technical representative(s) is/are appointed and the contractor shall be held responsible for the delay so caused to the work. The contractor shall submit a certificate of employment of the technical representative(s) along with every on account bill/ final bill and shall produce evidence if at any time so required by the Engineer-in-Charge at site fully during all stages of execution of work, during recording/checking/ test checking of measurements of works and whenever so required by the Engineer-in-Charge and shall also note down instructions conveyed by the Engineer-in- Charge or his designated representative(s) in the site order book and shall affix his/ their signature in token of noting down the instructions and in token of acceptance of measurements/ checked measurements/test checked measurements. The representative(s) shall not look after any other work. Substitutes, duly approved by Engineer-in-Charge of the work in similar manner as aforesaid shall be provided in event of absence of any of the representative(s) by more than two days.

If the Engineer-in-Charge, whose decision in this respect is final and binding on the contractor, is convinced that no such technical representative(s) is/are effectively appointed or is/are effectively attending or fulfilling the provision of this clause, a recovery (non-refundable) shall be affected from the contractor as specified in Schedule 'F' and

(ii) The contractor shall provide and employ on the site only such technical assistantsas are skilled and experienced in their respective fields and such foremen and supervisory staff as are competent to give proper supervision to the work.

The contractor shall provide and employ skilled, semiskilled and unskilled labour as is necessary for proper and timely execution of the work.

The Engineer-in-Charge shall be at liberty to object to and require the contractor to remove from the works any person who in his opinion misconducts himself, or is incompetent or negligent in the performance of his duties or whose employment is otherwise consideredby the Engineer-in-Charge to be undesirable. Such person shall not be employed again at works site without the written permission of the Engineer-in-Charge and the persons so removed shall be replaced as soon as possible by competent substitutes.

CLAUSE 37 - DELETED CLAUSE 38 - DELETED CLAUSE 38A - DELETED

CLAUSE 39

RELATIVE WORKING WITH INSTITUTE

It is presumed that the Contractor is not related to any of the officers of the Institute. If he has any such relatives' full particulars of the same should be furnished.

CLAUSE 40
RESTRICTION FOR EMPLOYING RETIRED GOVERNMENT SERVANT

No Engineer of Gazetted rank or other Gazetted officer employed in Engineering or Administrative duties in the Engineering Institute of the Government of India shall workas a Contractor or employ of contractor for a period of one year after his retirement from Government service without the previous permission of Government of India in writing. This contract is liable to be cancelled if either the Contractor or any of his employees is found at any time to be such a person who had not obtained the permission of Government of India as aforesaid before submission of the tender or engagement inthe Contractor's service as the case may be.

CLAUSE 41
RETURN OF MATERIALS & RECOVERY FOR EXCESS MATERIAL ISSUED

i) After completion of the work and also at any intermediate stage in the event of non- reconciliation of materials issued, consumed and in balance - (see Clause 10), theoretical quantity of materials issued by the Government for use in the work shall be calculated on the basis and method given hereunder: -

a. Quantity of cement & bitumen shall be calculated on the basis of quantity of cement & bitumen required for different items of work as shown in the Schedule of Rates mentioned in Schedule 'F'. In case any item is executed for which standard constants for the consumption of cement or bitumen are not available in the above-mentioned schedule/statement or cannot be derived from the same shall be calculated on the basis of standard formula to be laid down by the Engineer-in-Charge.

b. Theoretical quantity of steel reinforcement or structural steel sections shall be taken as the quantity required as per design or as authorized by Engineer-in- Charge, including authorized lappages, chairs etc. plus 5% wastage due to cutting into pieces, such theoretical quantity being determined and compared with the actual issues each diameter wise, section wise and category wise separately.

c. Theoretical quantity of G.I. & C.I. or other pipes, conduits, wires and cables, pig lead and G.I./M.S. sheets shall be taken as quantity actually required and measured plus 5% for wastage due to cutting into pieces (except in the case of G.I./M.S. sheets it shall be 10%), such determination & comparison being made diameter wise & category wise.

d. For any other material as per actual requirements.

ii) Over the theoretical quantities of materials so computed a variation shall be allowed as specified in Schedule 'F'. The difference in the net quantities of material actually issued to the contractor and the theoretical quantities including such authorized variation, if not returned by the contractor or if not fully reconciled to the satisfaction of the Engineer-in- Charge, within fifteen days of the issue of written notice by the Engineer-in-charge to this effect shall be recovered at the rates specified in Schedule 'F', without prejudice to the provision of the relevant conditions regarding return of materials governing the contract. Decision of Engineer-in-Charge in regard to theoretical quantities of materials, which should have been actually used as per the Annexure of the standard schedule of rates and recovery at rates specified in Schedule 'F', shall be final & binding on the contractor.

For non-scheduled items, the decision of the Engineer-in-Charge regarding theoretical quantities of materials which should have been actually used, shall be final and binding on the contractor.

iii) The said action under this clause is without prejudice to the right of the Government/Department to take action against the contractor under any other conditions of contract for not doing the work according to the prescribed specifications.

CLAUSE 42 – DELETED

CLAUSE 43

APPRENTICE ACT TO BE COMPLIED WITH

The Contractor shall comply with the provisions of the Apprentices Act 1961 and the rules and orders issued there under from time to time. If he fails to do so his failure will be a breach of the contract and the Engineer-in-charge may in his discretion cancel the contract. The Contractor shall also be liable for any pecuniary liability arising on account of any violation by him of the provisions of the Act.

CLAUSE 44 – DELETED
CLAUSE 45

RELEASE OF SECURITY DEPOSIT AFTER LABOUR CLEARANCE

Security Deposit of the work shall not be refunded till the contractor produces a clearance certificate from the Labour officer. As soon as the work is virtually complete the contractor shall apply for the clearance certificate to the Labour officer under intimation to the Engineer- in- charge. The Engineer-in-charge, on receipt of the said communication, shall write to the Labour officer to intimate if any complaint, its pending against the contractor in respect of the work. If no complaint is pending, on record till after 3 months after completion of the work and/or no communication is received from the Labour officer to this effect till six months after the date of completion, it will be deemed to have received the clearance certificate and the Security Deposit will be released if otherwise due.

C. GENERAL GUIDELINES

(TO BE READ IN CONJUNCTION WITH THE GENERAL CONDITIONS OF CONTRACT (GCC))

1. MARKING BASE LINES AND LEVELS

The Contractor shall layout his work from base lines and grades established by the Department, and shall be responsible for all measurement in connection therewith. The Contractor shall at his own expense furnish all stakes, template, platforms, equipment, ranges and labour that may be required in setting or laying out any part of the work, the Contractor shall be held responsible for the proper execution of the work to such lines and grades as may be established or indicated on the drawings and specifications. The Contractor shall check the bench marks and benches existing at the site for laying out lines and levels. The Contractor is to construct and maintain proper benches at the intersections of all main walls, in order that the lines and levels may be accurately checked at all times. The Contractor shall provide suitable stones with flat tops and built the same in concrete for temporary bench marks. All the pegs for setting out the works and fixing the necessary levels required for the execution thereof shall, if desired by the Engineer-in-charge, likewise to built in masonry at such places and in such mortar as the Engineer-in-charge may determine. Theodolite, levels, prismatic compass, chain, steel and metallic tapes and all other surveying instruments found necessary on the works shall be provided by the Contractor for their own use and for inspection by Departmental officers.

2. STORES & MATERIALS, INSPECTION AND AVOIDING INCONVENIENCE TOINSTITUTES ACTIVITIES

Stores and material required for the work are to be stored by the Contractors only in places to be indicated by Engineer-in-charge. The Engineer-in-charge shall have the right at any time to inspect and examine any store and materials intended to be used in or on the works on the site or at any factory or workshop or other places where such stores or materials are being constructed or manufactured or processed or any place from where they are being obtained and the Contractor shall give such facilities as required to be given for such inspection and examination.

The Engineer-in-charge shall be entitled to have tests made at any approved Laboratory for any stores and/or materials supplied by the Contractor who shall provide at his own expense all facilities (viz.,) arrangements required for taking samples, conveyance, packing, etc., which the Engineer-in-charge may require for the purpose. Testing charges shall be borne by the Institute.

Any stores and materials brought to the site for use on the work shall not be removed off the site without prior written approval of the Engineer-in-

charge, but on final completion of the work Contractor shall at his own expense remove from the site all surplus stores and materials originally brought by him.

The Contractor shall not deposit materials on any site which will cause inconvenience to any of the Institutional activities. The Contractor shall undertake to clean the site free from rubbish to the satisfaction of the Engineer-in-charge. All surplus materials, rubbish and materials which may be dangerous/ cause inconvenience to the activities of the Institute shall be removed at the Contractor's cost and deposited at the places fixed by EIC.

3. SPECIFICATIONS AND DRAWINGS

The drawings furnished to the Contractor shall be interpreted and identified by figured dimensions and nomenclature as indicated therein. On no occasion the drawings shall be scaled off and transferred to work.

In all cases where enlarged detailed drawings are given for any component of work, these drawings shall take precedence over those incorporated in general drawing to a comparatively smaller scale.

a) Prior to the execution of the work, the contractor shall check all drawings, specifications and shall immediately report all errors, discrepancies and/or omissions discovered therein to the Engineer-in-charge and obtain appropriate orders on the same. Any adjustment made by the Contractor without prior approval of the Engineer- in-charge shall be at his own risk, each description of item in the schedule of quantities shall be read in injunction with the relevant drawings and the specifications and the Contractor's rate shall be deemed to be for such complete work unless otherwise specified by the Contractor while tendering.

b) Cost of all shop drawings, fabrication drawings or form work drawings and details to be furnished by the Contractor shall be deemed to be included in his tendered rates for the work. Accordingly, approval to shop drawings or other fabrication drawings

shall not be construed as authorizing award of additional work and as long as these belong to common individual scheme governed by specifications for which the Contractor has already quoted, no extra payment on any account will be admissible for all essential components that are to be necessarily executed to complete the work in all respects.

c) Prior to submission for approval, Contractor shall be responsible for thoroughly checking all drawings to ensure that they comply with the

intent & requirements of contract specifications & that they fit with the overall building layout. Drawing found to be inaccurate/ in error will be returned for correction by the Contractor.

d) For all drawings to be submitted by the Contractor for the approval of the Engineer- in-charge, the Contractor shall submit 2 (two) copies of each drawing for approval.

e) The approval of drawing by the Engineer-in-charge shall not be construed as a complete dimensional check, but will indicate only that the general method of construction and detailing is satisfactory. The contractor shall be totally responsible for the dimensions and design, safety of the system evolved inclusive of providing interconnected operational accessories adequate enough to accomplish satisfactory completion of work.

f) In case of difference between drawings and specifications, the specifications shall govern. Anything mentioned in the specification and not shown in the drawings or shown on the drawings but not mentioned in the specifications shall be like effect as if shown or mentioned in both.

4. SEQUENCE OF WORK

The sequence of work shall be generally as decided by the Engineer-in-charge taking into consideration other connected works.

5. CO-ORDINATION WITH OTHER CONTRACTORS

Contractor shall extend all co-operation to the other Contractors executing the work, who might be working at the site.

6. INSPECTION OF WORK

The work shall be carried out under the directions of the Engineer-in-charge in addition subject to inspection by the representative appointed by Engineer-in-charge to ensure strict compliance with the terms, specifications and conditions of the contract. Any failure on the part of the Engineer-in-charge or his representative during the progress of inspection of work to discover any defective work or to reject materials not up to standards shall not be deemed to have been accepted and should not be construed as waived. Any defects noticed either during the period of construction or after the completion up to a period of 12 months (6 months in the case of any work other than roadwork costing Rs.10,00,000/- and below) from the date of completion, the Contractor is liable to carry out all repairs/rectifications at his/ their own cost to the satisfaction of the Institute. Further in the event of the Contractor using

substandard/inferior quality of materials which at future date is not susceptible to replacement, for structural reasons or otherwise and if concurrence is given for retention of such structure, the Engineer-in-charge will have necessary authority to recover a proportionate sum decided as per his discretion. In case the structure with the use of substandard or inferior material cannot be retained in the

work as per the opinion of the Engineer-in-charge, portion or portions of such structure/work shall be dismantled and replaced new by the Contractor at his own cost. Partial or entire occupancy of the premises shall not be construed as the acceptance of the work or materials incorporates in the work. No changes whatsoever to any provision of the specification shall be made without written authorized from the Engineer-in-charge.

7. MEASUREMENT

Where mode of measurement is not specified the measurements will be taken at site as per latest IS code of practice for measurements. The Contractor or his representative shall accompany the Engineer-in-charge or his representative when required to do so and assist in taking the measurement and shall agree to the measurements recorded on the spot. The measurements for all works in general shall be measured as per the dimensions.

All measurements shall be taken with steel tapes only. Necessary scaffolding, staging and ladders required for taking measurements shall be provided by Contractor at his cost, besides offering service of labourers for taking such measurements.

If the Contractor fails to accompany the Engineer-in-charge or other persons who have been duly authorized by the Engineer-in-charge to take measurements then he should be bound by the Measurements recorded by the Engineer-in-charge or his representative.

8. MAKE AND OTHER DETAILS OF MATERIALS

The Contractor shall furnish a list of the makes and other details of various materials he proposes to use on the work and this would be subject to the approval of Institute.

9. SAMPLES

Samples of all materials to be incorporated in the work shall be submitted to the Engineer- in-charge for his approval without claiming any extra cost.

The approved samples will be kept with the Engineer-in-charge till the completion of work. Materials not conforming strictly to the samples are liable to be rejected.

10. NO DAMAGE TO INSTITUTE PROPERTY

No damage should be done to the property of the Institute to the buildings or trees and if any damage so done, the Contractor is responsible for making good the loss according to the decision taken by the Engineer-in-charge.

11. SAFETY PROVISIONS/ CONTRACTOR TO BEAR THE EXPENSES INACONNECTION WITH ACCIDENTS, IF ANY

The Contractor shall provide all necessary fencing lights required to protect the public from accident and shall be bound to bear the expenses of defence of every suit, action or other proceedings which may be brought by any person for injury sustained owing to neglect of the above precautions and to pay any damages and costs which may be awarded in any such actions or proceedings to any such persons or which may with the consent of the Contractor be paid to compromise-any claim by any such person.

12. SECURITY REGULATIONS TO BE FOLLOWED

The Contractor have to follow strictly the regulations of the Institute at the work site regarding entry of personnel, materials etc. and any other regulation that might be enforced from time to time. Contractor's personnel/ workers should possess valid passes and should produce the passes to Security/Institute authorities when demanded. Contractor's personnel/workers should not enter the Institute premises, other than those for which the passes are issued and also should not enter after/before working hours without obtaining prior approvals. Any person found in the Institute premises without authorized passes during, before or after working hours is liable for actions as per the Institute procedures and rules.

All materials and articles brought by the Contractor to the work site shall have tobe declared at the security gate. Similarly, no materials shall be taken out from the Institute premises without proper gate pass which will be issued/ caused to be issued by the Engineer-in- charge to the Contractor on written request. It is tobe noted that loading of Contractor

materials in vehicles and truck shall be done in the presence of Institute personnel. The Contractors representative will have to escort the material still the security check is over.

For working on Sundays, Holidays and late hours, even though permission will be accorded by the Engineer-in-charge the Contractor will have to make application to the Security Institute also and keep them informed well in advance.

Any breach of above security regulations and rules in force from time to time will be viewed seriously. No claim whatsoever will be entertained by the Institute on account of observance of Security Regulations.

13. SECURITY REGULATIONS TO BE FOLLOWED

The Contractor have to follow strictly the regulations of the Department at the work site regarding entry of personnel, materials etc. and any other regulation that might be enforced from time to time. Contractors personnel/ workers should possess valid passes and should produce the passes to Security/Department authorities when demanded. Contractors personnel/workers should not enter the Departmental premises, other than those for which the passes are issued and also should not enter after/before working hours without obtaining prior approvals. Any person found in the Departmental premises without authorized passes during, before or after working hours is liable for actions as per the Departmental procedures and rules.

All materials and articles brought by the Contractor to the work site shall have to be declared at the security gate. Similarly, no materials shall be taken out from the Departmental premises without proper gate pass which will be issued/ caused to be issued by the Engineer-in-charge to the Contractor on written request. It is to be noted that loading of Contractor materials in vehicles and truck shall be done in the presence of Departmental personnel. The Contractors representative will have to escort the materials till the security check is over.

For working on Sundays, Holidays and late hours, even though permission will be accorded by the Engineer-in-charge the Contractor will have to make application to the Security Department also and keep them informed well in advance.

Any breach of above security regulations and rules in force from time to time will be viewed seriously. No claim whatsoever will be entertained by the Department on account of observance of Security Regulations.

14. SUBCONTRACTING

Subcontracting as a matter of rule not allowed.

However, if it is inevitable in special cases, the Contractor shall within fifteen (15) days after the date of award of this contract notify the Engineer-in-charge in writing of the names of all Sub-Contractor proposed for the work and the extent and character of the

work to be done by each. The employment of any Sub-Contractor will be subjected to the approval of the Engineer-in-charge. If for any reason, at any time during the progress of work the Engineer-in-charge determines that any Sub –Contractor is incompetent or undesirable he will notify the Contractor accordingly and the Contractor shall take steps immediately to cancel such Sub-Contractor. Sub-letting by such contract shall be subjected to same regulations. Nothing contained in this contract shall create any contractual relation between any Sub-Contractor and the Department and the Contractor shall be entirely responsible for all the work included in the contract whether executed by him or through his Sub-Contractors. In particular it may be noted that the Contractor shall obtain steel doors and windows from a reputed manufacturer and before placing order for these, the Contractor shall obtain the concurrence of the Department for the agency from whom he proposes to obtain steel doors and windows.

15. ANALYSIS OF RATES QUOTED

The contractor when called for by the Institute should furnish detailed analysis in support of the rates quoted by him against each item of the tender. The Institute reserves the right to utilize the analysis thus supplied in settling any deviations or claims arising on this contract.

An allowance of 15% towards Contractors overheads and profits will be considered while determining the rate/rates on the costs of prevailing market rates as per clause 12 of general conditions of the contract.

16. POWER OF ATTORNEY HOLDERS NOT TO BE PERMITTED FOR EXECUTION OF WORKS.

It may be noted that the original Contractors on whom the work order is issued only shall carry out the work directly and they will not give any power of attorney for execution of the work for anyone else. As a special case, in case of partnership firm, one of the partners can carry out the work with due authorization, provided the partnership deed is to be submitted to the Department. Similarly, in case of a Construction

Company, Private Limited Company, Public Limited Company only the authorized signatory of the Company shall act and carry out the work. All such proposals must be made clear by the tenderer while submitting the tender itself and get it specifically approved by the Department. In case, during the execution if the Engineer-in-charge feels that the authorized signatory/ authorized representative is not able to manage works, the authorized signatory/representative can be removed by the Engineer-in-charge.

17. PUBLICITY OF WORKS EXECUTED FOR RRI

The Contractor / Sub-Contractor shall obtain prior written permission of the Department whenever they propose to mention the work executed or being executed for the Department in any of their publicity literature advertisements. The text of the publicity literature advertisement should be submitted while applying for permission.

18. NO INTEREST FOR DELAYED PAYMENTS

Wherever the time limits are specified in the General Conditions of Contract and other parts of the Contract, for payments and releasing of bank guarantee etc., by Department,Department will not pay any interest for delay, if any, beyond the stipulated time limits, caused due to unavoidable official reasons.

D. SCHEDULES

SCHEDULE `A' - SCHEDULE OF QUANTITIES (PRICE SCHEDULE SEPARATELY ATTACHED)

General notes:

Rates for various items of work in the accompanying schedule of quantities for **Proposed construction of HI RES LABORATORY at RRI Campus, Bengaluru** shall be quoted after taking into account of the following notes.

1. This is an indivisible works contract. The rates quoted shall include all taxes and levies payable under respective statues etc., as applicable will be deducted as per statues from the bill and remitted to the Institute concerned.
2. Being an indivisible Government Works contract GST is applicable, unless specifically mentioned.
3. The rate quoted shall abide all the provisions mentioned in General Conditions of Contract (GCC) and other general guidelines mentioned in this tender.
4. The rates for various items of works in the Schedule of quantities shall be quoted taking into account the cost of materials, labour, tools and plants, scaffolding, necessary wastages, cost of handling and conveyance of materials to place of work, over heads and profits and any other incidentals included therein.
5. Rates quoted by the Tenderers for various items of work shall be deemed to be inclusive of such leads and lifts mentioned therein and/or as shown in the accompanying tender drawings. Where such information is absent, the rates shall bedeemed to be inclusive of the necessary leads and lifts to complete the item of work occurring at any height and with any required leads.
6. The rates quoted shall be in decimal coinage.
7. Rates quoted by the tenderer/ contractor in item rate tender in figures and words shall be accurately filled in so that there is no discrepancy in the rates written in figures and words. However, if a discrepancy is found, the rates which correspondwith the amount worked out by the Contractor shall be taken as correct.
8. If the amount of an item is not worked out by the Contractor or it does not correspond with the rate written either in figures or words, then the rate quoted by the Contractor in words shall be taken as correct.
9. Where the rates quoted by the contractor in figures and in words tally but the amount is not worked out correctly the rate quoted by the Contractor will be taken as correct and not the amount.

10. In the event no rate has been quoted for any item(s), leaving space both in figure(s), word(s), and amount blank, it will be presumed that the contractor has included the cost of this/ these item(s) in other item(s). The rate for such item(s) will be considered as ZERO. The work will be required to be executed as specified.

11. In the 'Item of work/ description of work' column 'unit' column, the various abbreviations shall mean as below.

    a. M/m/Rm/Mtr/MTR shall mean 'Metre' in length or breadth or depth.

    b. SQM/Sqm/SM/sqm/M^2/m^2 shall mean 'Square Metre' in area

    c. Cu.m/cu.m/Cum/M^3/m^3 shall mean 'Cubic Metre' in volume.

    d. Kg/kg/KG shall mean 'Kilogram' in weight.

    e. MT/mT/Mt/T shall mean 'Metric Tonne' in weight

    f. Cm/CM/cm shall mean 'Centimetre'

10. After duly filing the rates and amount, this price schedule shall be put in a cover super-scribed with 'Price Bid' and also the name of the work, NIT number and name of tenderer.

Signature of Tenderer
with Name and legal
address

Date:

(PRICE SCHEDULE SEPARATELY

ATTACHED)

SCHEDULE `F' - REFERENCE TO GENERAL CONDITIONS OF CONTRACT

Name of work: Proposed construction of HI RES LABORATORY at RRI Campus, Bengaluru

1.	Estimated cost of work	Rs. 2.45 Crores Inclusive of prevailing GST.
2.	Earnest Money	Rs. 4,90,000/-
3.	Performance Guarantee/ Security Deposit	5% of Work order value

General Rules & Direction:

1.	Officer inviting Tender	Administrative Officer, RRI
2.	Percentage on cost of materials and labour to cover all overheads and profits	15%
3.	Schedule of Rates (SOR)	As per latest CPWD and DOS.

REF: CLAUSE 1 OF GCC: PERFORMANCE GUARANTEE	
(i) Time allowed for revalidating the earnest money as performance Guarantee, from the date of issue of letter of acceptance.	Not applicable
(ii) Maximum allowable extension beyond the period provided in (i) above	15 days
REF: CLAUSE 2A OF GCC: COMPENSATION OF DELAY	
Authority of fixing compensation under clause 2A	Director, Raman Research Institute
REF: CLAUSE 5 OF GCC: TIME & EXTENSION FOR DELAY	
Number of days from the date of issue of letter of Acceptance for reckoning date of start	As per work order
Time allowed for execution of work	**Six Months** from the date of fifteenth day of issue of work order.

REF: CLAUSE 6 & 6A OF GCC: MEASUREMENT OF WORK DONE AND COMPUTERIZED MEASUREMENT BOOK

Clause applicable: 6/ 6A (non-applicable clause to be strike off)

REF: CLAUSE 10A OF GCC: MATERIALS TO BE PROVIDED BY THE CONTRACTOR

List of testing equipment to be provided by the contractor at site lab.

1		4	
2		5	
3		6	

REF: CLAUSE 10 B (ii) OF GCC: MOBILIZATION ADVANCE, INTEREST & RECOVERY

Whether Clauses 10 B (ii) shall be applicable No

(This is applicable only for works more than Rs.2.00 crores)

REF: CLAUSE 10A OF GCC: MATERIALS TO BE PROVIDED BY THE CONTRACTOR

List of testing equipment to be provided by the contractor at site lab.

REF: CLAUSE 10 B (ii) OF GCC: MOBILIZATION ADVANCE, INTEREST &RECOVERY

Whether Clauses 10 B (ii) shall be applicable No

(This is applicable only for works more than Rs.2.00 crores)

REF: CLAUSE 12 OF GCC: DEVIATIONS/ VARIATIONS, EXTENT AND PRICING

Deviation limit beyond which clause 12 shall apply

For Superstructure Work	**25%**
For Foundation Work	**50%**

REF: CLAUSE 16 OF GCC: ACTION IN CASE OF WORK NOT DONE AS PERSPECIFICATION

Competent Authority for deciding reduced rates: Director RRI

REF: CLAUSE 25 OF GCC: SETTLEMENT OF DISPUTES AND ARBITRATION

Law court of Jurisdiction : BANGALORE
KARNATAKA

REF: CLAUSE 36 OF GCC: EMPLOYMENT OF GRADUATE/ DIPLOMA ENGINEERS

Sl. No.	Minimum qualification of Technical representative	Discipline	Designation (Principal Technical/ Technical representative)	Minimum experience	Number	Rate at which recovery shall be made from the contractor in the event of not fulfilling provision of clause 36 (i)
1						
2						

REF: CLAUSE 41 OF GCC: RETURN OF MATERIALS AND RECOVERY FOR EXCESS MATERIALISSUED.

(i) Variations permissible on theoretical quantities:

(a)	Cement for works with estimated cost put to Tender not more than Rs. 5 Lakhs	5% plus/minus
	For works with estimated cost put to Tender more than 5 lakhs	2% plus/minus
(b)	Bitumen for all works	2.5% plus only & Nil on minus side
(c)	Steel Reinforcement and structural steel sections for each diameter, section and category	2% plus/minus
(d)	All other materials	Nil

(ii) Recovery rates for quantities beyond permissible variation:

Sl. No.	Description of Item	Rates in figures and words at which recovery shall be made from the Contractor	
		Excess beyond Permissible variation	Less use beyond the permissibl evariation
1.	Cement		
2.	Steel reinforcement a) M.S. Bars b) HYSD bars		
3.	Structural Sections		
4.	Bitumen issued free		
5.	Bitumen issued at stipulated fixed price		

SCHEDULE 'G' – CO-EFFICIENT FOR CEMENT CONSUMPTION

Refer Separate Booklet

SCHEDULE 'H' – STANDARD SAFETY CODES

Refer Separate Booklet

SCHEDULE 'I' – CPWD/BIS TECHNICAL SPECIFICATION

Refer Separate Booklet

PART- III

FORMATS

(TO BE FILLED IN BY THE TENDERER/ CONTRACTOR)

a. DRAFT BANK GUARANTEE BOND FOR PERFORMANCE SECURITY (GUARANTEE)

1. In consideration of the Director, Raman Research Institute (hereinafter called "The Government") having offered to accept the terms and conditions of the proposed agreement between …… …… and …… (hereinafter called "the said Contractor(s)") for the work (hereinafter called "the said agreement") having agreed to production of a irrevocable Bank Guarantee for Rs……. (Rupees ……. only) as a security/guarantee from the contractor(s) for compliance of his obligations in accordance with the terms and conditions in the said agreement.

2. We, ……(indicate the name of the bank) do hereby undertake to pay the amounts due and payable under this guarantee without any demure, merely on a demand from the Government stating that the amount claimed as required to meet the recoveries due or likely to be due from the said contractor(s). Any such demand made on the bank shall be conclusive as regards the amount due and payable by the bank under this Guarantee. However, our liability under this guarantee shall be restricted to an amount not exceeding Rs……. (Rupees…… Only).

3. We, …… (indicate the name of the Bank) the said bank further undertakes to pay the Government any money so demanded notwithstanding any dispute or disputes raised by the contractor(s) in any suit or proceeding pending before any court or Tribunal relating thereto, our liability under this present being absolute and unequivocal.

   The payment so made by us under this bond shall be valid discharge of our liability for payment thereunder and the Contractor(s) shall have no claim against us for making such payment.

4. We, …… (indicate the name of the Bank) further agree that the guarantee herein contained shall remain in full force and effect during the period that would be taken for the performance of the said agreement and that it shall continue to be enforceable till all the dues of the Government under or by virtue of the said agreement have been fully paid and its claims satisfied or discharged or till Engineer-in-charge on behalf of the Government certified that the terms and conditions of the said agreement have been fully and properly carried out by the said Contractor(s) and accordingly discharges this guarantee.

SPECIMEN

5. We, ... (indicate the name of the Bank) further agree with the
Government that the Government shall have the fullest liberty without our consent and without affecting in any manner our obligation hereunder to vary any of the terms and conditions of the said agreement or to extend time of performance by the said Contractor(s) from time to time or to postpone for any time or from time to time any of the powers exercisable by the Government against the said contractor(s) and to forbear or enforce any of the terms and conditions relating to the said agreement and we shall not be relieved from our liability by reason of any such variation, or extension being granted to the said contractor(s) or for any forbearance, act of omission on the part of the Government or any indulgence by the Government to the said Contractor(s) or by any such matter or thing whatsoever which under the law relating to sureties would, but for this provision, have effect of so relieving us.

6. This guarantee will not be discharged due to the change in the constitution of the Bank or the contractor(s).

7. We, ... (indicate the name of the Bank) lastly undertake not to revoke this guarantee except with the previous consent of the Government in writing.

8. This guarantee shall be valid up to..... unless extended on demand by
the Government. Notwithstanding anything mentioned above, our liability against this guarantee is restricted to Rs..... (Rupees
..... only) and unless a claim in writing is lodged with us within six months of the date of expiry or the extended date of expiry of this guarantee all our liabilities under this guarantee shall stand discharged.

Dated the ..... day of ..... for ..... (indicate the name of the Bank)

SPECIMEN

b. DRAFT BANK GUARANTEE BOND FOR SECURITY DEPOSIT

1. In consideration of the Director, Raman Research Institute (hereinafter called "The Government") having agreed to exempt ..... (hereinafter called "the said Contractor(s)") from the demand, under the terms and conditions of an Agreement No..... dated made between ..... and ..... for the work ..... (hereinafter called "the said Agreement") of Security Deposit for the due fulfillment by the said Contractor(s) of the terms and conditions contained in the said Agreement, on production of a Bank Guarantee for Rs..... (RUPEES ..... ONLY) .We..... (indicate the name of the Bank) ..... (hereinafter referred to as the Bank") at the request of ..... Contractor(s) do hereby undertake to pay to the Government an amount not exceeding Rs ..... (RUPEES ..... ONLY) on demand by Government.

2. We, ... (indicate the name of the Bank) do hereby undertake to pay amounts due and payable under this guarantee without any demure merely on a demand from the Government stating that the amount claimed is required to meet the recoveries due or likely to be due from the said Contractor(s). Any such demand made on the Bank shall be conclusive as regards to amount due and payable by the Bank under this Guarantee. However, our liability under this guarantee shall be restricted to an amount not exceeding Rs.....

3. We undertake to pay to the Government any money so demanded notwithstanding any dispute or disputes raised by the Contractor(s) in any suit or proceeding pending before any court or Tribunal relating thereto, our liability under this present being absolute and unequivocal.

SPECIMEN

The payment so made by us under this bond shall be valid discharge of our liability for payment thereunder and the Contractor(s) shall have no claim against us for making such payment.

4. We, ... (indicate the name of the Bank) further agree that the guarantee herein contained shall remain in full force and effect during the period that would be taken for the performance of the said agreement and that it shall continue to be enforceable till all the dues of the Government under or by virtue of the said Agreement have been fully paid and its claims satisfied or discharges or till Engineer-in-charge on behalf of the Government certifies that the terms and conditions of the said Agreement have been fully and properly carried out by the said Contractor(s) and accordingly discharges this guarantee.

5. We, ... (indicate the name of the Bank) further agree with the Government that the Government shall have the fullest liberty without our consent and without affecting in any manner our obligations hereunder to vary any of the terms and conditions of the said Agreement or to extend time of performance by the said Contractor (s) from time to time or to postpone for any time or from time to time any of the powers exercise ably by the Government against the said Contractor(s) and to forbear or enforce any of the terms and conditions relating to the said agreement and we shall not be relieved from our liability by reason of any such variation, or extension being granted to the said Contractor(s) or for any forbearance, act or omission on the part of the Government or any indulgence by the Government to the said Contractor(s) or by any such matter or thing whatsoever which under the law relating to sureties would but for this provision, have effect of so relieving us.

6. This guarantee will not be discharged due to the change in the constitution of the Bank or the Contractor (s).

7. We, ... (Indicate the name of the Bank) lastly undertake not to revoke this guarantee except with the previous consent of the Government in writing.

8. This Guarantee shall be valid up to ..... Unless extended on demand by Government. Notwithstanding anything mentioned above, our liability against this Guarantee is restricted to Rs.....

SPECIMEN

……(RUPEES ONLY) and unless a claim in writing is lodged with us within six months of the date of expiry or the extended date of expiry of this Guarantee, all our liabilities under this Guarantee shall stand discharged.

Dated the ……day of …… 20 ……for ……
……(indicate the name of the Bank)

Note: -

Before a Bank Guarantee is accepted, an affidavit duly sworn in before a first classmagistrate, may also be taken from the Contractor that he would keep the validity of the Bank guarantee intact by getting it suitably extended from time to time, at hisown initiative, up to a period of twelve months for any other maintenance period prescribed in the agreement after the recorded date of completion of the work as directed by the Engineer-in-charge and indemnifies the Government against any losses arising out of non-encashment of Bank guarantee. Such an undertaking maybe taken on a non-judicial stamp paper, as required, in the enclosed proforma.

c. BANK GUARANTEE TO SECURE A MOBILISATION ADVANCE

TO

The Director, Raman Research Institute, Bangalore

1. In consideration of the Director, Raman Research Institute (hereinafter called "the Government" which expression shall unless repugnant to the subject or context include his successor and assigns) having agreed under the terms and conditions of Contract No……. Dated ……made between * ……. and the Government in connection with …. [hereinafter called "the said Contract"] to make at the request of the Contractor a lumpsum advance of Rs……. (Rupees ……..) for utilizing it for the purpose of the Contract on his furnishing a guarantee acceptable to the Government, we the **…… Bank Ltd. (hereinafter referred to as "the said Bank") a company under the Companies Act, 1956 and having our registered office at ……. Do hereby guarantee the due recovery by the Government of the said advance with interest thereon as provided according to the terms and conditions of the Contract. We **……. do hereby undertake to pay the amount due and payable under this Guarantee without any demur, merely on a demand from the Government stating that the amount claimed is due to the Government under the said Agreement. Any such demand made on the ……Shall be conclusive as regards the amount due and payable by the …… under this guarantee and the ……. agree that the liability of the …… to pay the Government the amount so demanded shall be absolute and unconditional notwithstanding any dispute or disputes raised by the Contractor and not withstanding any legal proceeding pending in any Court or Tribunal relating thereto. However, our liability under this Guarantee shall be restricted to an amount not exceeding Rs……. (Rupees……).

2. We **…… Bank Ltd. further agree that the Government shall be the sole judge and as to whether the said Contractor has not utilized the said advance or any part thereof for the purpose of the contract and the extent of loss or damage caused to or suffered by the Government on account of the said advance together with interest now being recovered in full and the decision of the Government that the said Contractor has not utilized the said advance or any part thereof for the purpose of the Contract and as to the amount or amounts of loss or damage caused to or suffered by the Government shall be final and binding on us.

SPECIMEN

3. We, the said Bank further agree that the Guarantee herein contained shall remain in full force and effect during the period that would be taken for the performance of the said Contract and till the said advance with interest has been fully recovered and its claims satisfied or discharged and till certify that the said advance with interest has
been fully recovered from the said Contractor, and accordingly discharges this Guarantee subject, however, that the Government shall have no claims under this Guarantee after six months from date of completion of the said Contract, as the case may be, unless a notice ofthe claim under this Guarantee has been served on the Bank before the expiry if the said period of six months in which case the same shall be enforceable against the Bank notwithstanding the fact that the same is enforced after the expiry of the said period of six months.

4. The Government shall have the fullest liberty without affecting in any way the liability of the Bank under this Guarantee or indemnity, from time to time to vary any of the terms and conditions of the said contract or the advance or to extend time of performance by the said Contractor or to postpone for any time and from time totime any of the powers exercisable by it against the said contractor and either to enforce or forbear from enforcing any of the terms and conditions governing the said Contract or the advance or securities available to the Government and the said Bank shall not be released from its liability under these presents by any exercise by the Government of the liberty with reference to the matters aforesaid or by reasons of time being given to the said Contractoror any other forbearance, act or omission on the part of the Government or any indulgence by the Government to the said Contractor or of any other matter or thing whatsoever which under the law relating to sureties would but for this provision have the effect of so releasing the Bank from its such liability.

5. It shall not be necessary for the Government to proceed against the contractor before proceeding against the Bank and the Guarantee herein contained shall be enforceable against the Bank notwithstanding any security which the Government may have obtained or obtain from the Contractor shall at time when proceedings are taken against the Bank hereunder be outstanding or unrealized.

6. We, the said Bank lastly undertake not to revoke this Guarantee during its currency except with the previous consent of the Government in writing and agree that any change in the constitution of the said Contractor or the said Bank shall not discharge our liability hereunder.

7. This guarantee shall be valid up to .....unless extended on demand by Government. Notwithstanding anything mentioned above, our liability against this guarantee is restricted to Rs..... [Rupees .....] and unless a claim in writing is lodged with us within six months of the date of expiry or the extended date ofexpiry of this guarantee all our liabilities under this guarantee shall stand discharged.

SPECIMEN

Dated this ……. day of ……2026

For and on behalf of the Bank [Name and Designation]

The above Guarantee is accepted by the Director, Raman Research Institute ……

Or:

For and on behalf of the Director, Raman Research Institute
……. [Name and Designation]

FORMAT 3

AFFIDAVIT

I/ We, have submitted a Bank guarantee for the work ..... (Name of work) Agreement No. ..... dated..... from ..... (Name of Bank with full address) to the Administrative Officer, RRI/Engineer-in-charge with a view to seek exemption from payment of Security Depositing cash. The Bank guarantee expires on ....I/We undertake to keep the validity of the Bank guarantee intact by getting it extended from time to time at my/our owninitiative up to a period of.....months after the recorded date of completion of the work as directed by the Engineer-in-charge.

I/We also indemnify the Government against any losses arising out of non-encashment ofthe Bank guarantee, if any.

Note: This affidavit is to be given by the executant before a first-class Magistrate.

Signature with legal address

Witnesses:

1).....

2).....

SPECIMEN

FORMAT 4

INDEMNITY BOND

Note:

The contractor shall furnish an indemnity bond in non-judicial stamp paper worth Rs.500/- within ten days of the acceptance of the tender as per the format given below:

In consideration of the Director, Raman Research Institute, this bond of indemnity is hereby made on this day the ..... of .....20.... between M/s./Shri..... (Hereinafter called the first party) in favor of the Director, Raman Research Institute represented by Engineer in chargeof the work of..... (Hereinafter called second party)

Whereas the first party is the contractor for the said work and whereas the first party has agreed to comply with the clause 19 of the General Conditions of Contract (GCC) for the said work.

Now this deed witnesses that the first party agrees to be liable to indemnify the Government/ second party in accordance with clause 19 in General Conditions of Contract (GCC) for the said work and shall at all times keep the Government/ second party indemnified against all future claims in respect of the said clause and first party also agrees to indemnify the Government/ second party against or in respect of all charges, costs and damages which the Government/ second party may incur on account of default made by the first party in respect of the said clauses.

In witness whereof the first party has signed this bond on the date first above written in the presence of following witnesses.

Signature of First party

Witnesses:

1).....

2).....

SPECIMEN

DATED: 12.11.2026

RAMAN RESEARCH INSTITUTE

C.V. Raman Avenue, Sadashivanagar, Bengaluru - 560080

Proposed construction of HI RES LABORATORY at RRI Campus, Bengaluru

Item Rate Tender & Contract for works

NIT No: RRI/E&B/NIT/PT-17/2026-27, Dated: 30.10.2026

TENDER DOCUMENT- PRICE BID

ESTATES AND BUILDINGS – 2026-27

IMPORTANT NOTE: THE PRICE BID SHALL BE SEPARATELY SUBMITTED IN *COVER ii.* AND SHALL NOT BE PUT ALONG WITH TECHNICAL BID *COVER i.* IN WHICH CASE THE ENTIRE TENDER IS SUMMARILY REJECTED.

RAMAN RESEARCH INSTITUTE

C.V. Raman Avenue, Sadashivanagar, Bengaluru – 560080

NAME OF WORK**: Proposed construction of HI RES LABORATORY at RRI Campus, Bengaluru**

TENDER DOCUMENT- PRICE BID

INDEX

SL. NO.	CONTENTS	PAGE NO.
01	Notice Inviting Tender	03
02	Schedule of Quantities	04-46
03	List of Approved Makes	Enclosed

RAMAN RESEARCH INSTITUTE, BENGALURU

GOVERNMENT OF INDIA

NOTICE INVITING TENDER

Tender Notice No. **RRI/E&B/NIT/PT – 17/2026-27** Dated: 30.10.2026

1. On Behalf of the Director, Raman Research Institute, sealed, item-rate tenders are invited for the following work.

Sl. No	Description	Details
1.	Title of work	Proposed construction of HI RES LABORATORY at RRI Campus, Bengaluru
2.	Estimated cost put to tender	**RS. 2.45 Crores** inclusive of prevailing GST
3.	Period of completion in months reckoned from fifteenth day from the date of issue of work order.	Six Months
4.	Cost of tender document (a) Original set	Rs.590/- inclusive of GST
5.	Period during which the request for tender document can be obtained.	12/11/2026 to 02/12/2026
6.	Last date and time for receiptof tenders.	03/12/2026 at 3.00PM
7.	Due date and time of openingof tenders.	03/12/2026 at 4.00PM
8.	Earnest money deposit (EMD)	Rs. 4,90,000/-

PRICE BID

SCHEDULE OF QUANTITIES

Compliance with Approved Makes List

The Tenderer shall strictly adhere to the Approved Makes List enclosed with this Financial Bid while quoting the rates for all items specified in the BOQ.

The Tenderer shall quote only the make/brand specified in the enclosed Approved Makes List against the respective BOQ item. The Tenderer shall carefully verify the Approved Makes List before submitting the Financial Bid and ensure that the make/brand quoted for each item is in full conformity with the approved list.
No alternative, equivalent, substitute, or non-approved make/brand shall be quoted or supplied without the prior written approval of the Competent Authority.

Important Note:
Any deviation from the Approved Makes List shall result in summarily rejection of the bid, as decided by the Competent Authority. No further correspondence is entertained in this regard.

The Tenderer shall ensure that the make/brand quoted in the Financial Bid shall be the same make/brand supplied, installed and commissioned during execution of the work. Any change of make/brand after submission of the bid shall require prior written approval of the Competent Authority.

The Approved Makes List is enclosed separately shall form an integral part of the tender document, and compliance with the same shall be mandatory for the Tenderer.

Name of Work: HI RES LAB - Conversion of Boat shed area into lab area at RRI Campus, Bengaluru

SCHEDULE OF QUANTITIES

SL. No.	DESCRIPTION	UNIT	QTY	RATE	AMOUNT
	Important Note: For approved makes materials refer annexure attached along with SOQ. The make shall be adopted as per the sequence provided in the approved makes. In case the first approved make is not available, approval may please be taken subsequent of makes.				
	PART - A : CIVIL WORKS				
1	Earth work in excavation by mechanical means (Hydraulic excavator) / manual means over areas (exceeding 30cm in depth. 1.5 m in width as well as 10 sqm on plan) including disposal of excavated earth, lead upto 50m and lift upto 1.5m, disposed earth to be levelled and neatly dressed, all complete as per drawings , specifications and direction of Engineer in charge.				
a	In All kind of soil	CUM	350.00		
	Rate in words:				
2	Filling available excavated earth (excluding rock) in trenches, plinth, sides of foundations etc. in layers not exceeding 20cm in depth, consolidating each deposited layer by ramming and watering, for all leads & lifts, all complete as per specification and direction of Engineer-In-Charge.	CUM	260.00		
	Rate in words:				

SL. No.	DESCRIPTION	UNIT	QTY	RATE	AMOUNT
3	Providing & Injecting chemical emulsions ANTI-TERMITE TREATMENT-Providing and injecting approved chemical emulsions as specified for pre-constructional ANTI-TERMITE TREATMENT and creating a chemical barrier under and around column pits, wall trenches, basement excavations, top surfaces of plinth filling, junction of wall and floor, along the external perimeter of building, expansion joints, surrounding of pipes and conduits etc. all complete as specified and directed. (Plinth area of the Building at ground floor only shall be measured). The contractor shall provide guarantee of minimum 10 years for material and workmanship including a Bank Guarantee for an amount equal to 50% of the value of work, valid for 5 years from the date of completion of defect liability period.	SQM	350.00		
	Rate in words:				
4	Providing and laying in position cement concrete of specified grade at all levels and locations excluding the cost of centering and shuttering for work all complete as per specification and direction of Engineer-In-Charge.				
a	1:3:6 (1 Cement : 3 coarse sand : 6 graded stone aggregate 20mm nominal size)	CUM	40.00		
	Rate in words:				
b	1:2:4 (1 cement : 2 coarse sand : 4 graded stone aggregate 20mm nominal size)	CUM	2.00		
	Rate in words:				
c	Providing and laying damp-proof course 40 mm thick with cement concrete 1:2:4 (1 cement : 2 coarse sand (Zone-III) : 4 graded stone aggregate 12.5mm nominal size) all complete as per specification and direction of Engineer-In-Charge.	SQM	10.00		
	Rate in words:				

SL. No.	DESCRIPTION	UNIT	QTY	RATE	AMOUNT
5	Providing and laying in position ready mixed **M-25** grade concrete for reinforced cement concrete work, using Pozzolana Portland Cement (PPC) and having cement content as per approved design mix, manufactured in fully automatic batching plant as per approved mix design of specified grade and transported to site of work in transit mixer for all leads, having continuous agitated mixer, including pumping of concrete from transit mixer to site of laying, including the cost of finishing and admixtures in recommended proportions as per IS : 9103 to accelerate/ retard setting of concrete, improve workability without impairing strength and durability, but excluding the cost of centering, shuttering & reinforcement, all complete as per specification and direction of the Engineer - in - charge. (Note :- Minimum Cement content in this item is 330 kg/cum. Extra cement up to 10% of the minimum specified cement content in design mix shall be payable separately. In case the cement content in design mix is more than 1.10 times of the specified minimum cement content, the contractor shall have discretion to either re-design the mix or bear the cost of extra cement. However, no amount shall be payable on account of increase in quantity of admixture to be used due to use of cement in excess than minimum cement content.)				
a	All works upto Plinth Level	CUM	120.00		
	Rate in words:				
b	All works above plinth level upto floor V level	CUM	100.00		
	Rate in words:				
6	Providing and Fixing Centering & Shuttering in straight or curvilinear or circular works and including strutting, propping, tie bolt, spring coil and plastic cone etc. wherever needed and removal of form work, all complete as per specifications, drawings and direction of Engineer in-Charge, for following structural elements. The rates shall be applicable at all heights and locations except for such structural elements as mentioned in the Item No. 1.4.2)				
a	columns, pillars, piers, abutments, posts and struts	SQM	100.00		
	Rate in words:				
b	lintel beams, plinth beams, girders, bressumers and cantilevers	SQM	220.00		

SL. No.	DESCRIPTION	UNIT	QTY	RATE	AMOUNT
	Rate in words:				
c	foundations, footings, bases for columns	SQM	100.00		
	Rate in words:				
d	Suspended floors, roofs, landings, balconies and access platform	SQM	5.00		
	Rate in words:				
e	Extra for additional height in centering, shuttering for suspended floors, roofs, landings, beams and balconies wherever required with adequate bracing, propping etc. including cost of de-shuttering and decentering at all levels, over a height of 3.5 m, for every additional height of 1 metre or part thereof (Plan area to be measured)	SQM	5.00		
	Rate in words:				
7	Supply and fixing of steel reinforcement (**Fe 500D**, TMT bars) for R.C.C. work including supply, straightening, cutting, bending, placing in position and binding , all complete as per specification and direction of Engineer-In-Charge.	MT	10.00		
	Rate in words:				
8	Providing and laying Half brick masonry with non modular fly ash lime Gypsum bricks (FALG bricks) of class designation 10, conforming to IS : 12894, in super structure above plinth and upto floor V level in Cement mortar 1 : 4 (1 cement : 4 coarse sand) all complete as per specification and direction of Engineer-In-Charge.	SQM	15.00		
	Rate in words:				
9	Providing and laying Brick work with non modular fly ash lime bricks (FALG Bricks) conforming to IS:12894, class designation 10 average compressive strength in superstructure above plinth level up to floor V level in Cement mortar 1 : 4 (1 cement : 4 coarse sand) all complete as per specification and direction of Engineer-In-Charge.	CUM	207.00		
	Rate in words:				

SL. No.	DESCRIPTION	UNIT	QTY	RATE	AMOUNT
10	Providing and laying **600 micron guage HDPE sheet** below Grade slab, to the required levels, including supply,loading and unloading, storing, transportation, laying, hot seam welding of joints with sufficient 200mm over laps, sealing of junctions, all leads and lifts, etc.,complete	SQM	350.00		
	Rate in words:				
11	62 mm thick cement concrete flooring with concrete hardener topping, under layer 50 mm thick cement concrete 1:2:4 (1 cement : 2 coarse sand : 4 graded stone aggregate 20 mm nominal size) and top layer 12 mm thick cement hardener consisting of mix 1:2 (1 cement hardener mix : 2 graded stone aggregate, 6 mm nominal size) by volume, hardening compound mixed @ 2 litre per 50 kg of cement or as per manufacture's specifications. This includes cost of cement slurry, but excluding the cost of nosing of steps etc. complete				
a	Lab Area	SQM	510.00		
	Rate in words:				
12	Providing and laying Ceramic glazed floor tiles of size 300x300 mm (thickness to be specified by the manufacturer) of 1st quality conforming to IS : 15622 of approved make in colours such as White, Ivory, Grey, Fume Red Brown, laid on 20 mm thick cement mortar 1:4 (1 Cement : 4 Coarse sand), Jointing with grey cement slurry @ 3.3 kg/sqm including pointing the joints with white cement and matching pigment etc., complete.	SQM	15.00		
	Rate in words:				
13	Providing and fixing 1st quality ceramic glazed floor tiles conforming to IS: 15622 (thickness to be specified by the manufacturer) of approved make in all colours, shades except burgundy, bottle green, black of any size as approved by Engineer-in-Charge in skirting, risers of steps and dados over 12 mm thick bed of cement Mortar 1:3 (1 cement: 3 coarse sand) and jointing with grey cement slurry @ 3.3kg per sqm including pointing in white cement mixed with pigment of matching shade complete.	SQM	90.00		
	Rate in words:				

SL. No.	DESCRIPTION	UNIT	QTY	RATE	AMOUNT
14	Providing and fixing 18 mm thick gang saw cut, mirror polished, premoulded and prepolished, machine cut for kitchen platforms, vanity counters, window sills, facias and similar locations of required size, approved shade, colour and texture laid over 20 mm thick base cement mortar 1:4 (1 cement : 4 coarse sand), joints treated with white cement, mixed with matching pigment, epoxy touch ups, including rubbing, curing, moulding and polishing of edges to give high gloss finish etc. complete at all levels.				
	Granite stone slab of colour black, Cherry/Ruby red				
	Area of slab over 0.50 sqm	SQM	2.00		
	Rate in words:				
15	Providing and applying 6 mm thick cement plaster 1:3 (1 cement : 3 fine sand) to concrete ceiling bottom surfaces with cement mortar at all levels including all labour, scaffolding, material, plant and machinery, all complete as per specifications and direction of Engineer in Charge.	SQM	5.00		
	Rate in words:				
16	Providing & applying plaster to wall with 15 mm thick cement mortar 1:4 (1 cement: 4 coarse sand) on external surfaces with finished smooth, including scaffolding, curing, etc. upto 10 m height from Ground level, all complete as per specifications and direction of Engineer in Charge.	SQM	1000.00		
	Rate in words:				
17	Providing & applying plaster to wall with 18 mm thick cement plaster in two coats under layer 12mm thick cement plaster 1:5 (1 cement: 5 coarse sand) and top layer 6mm thick cement plaster 1:3 (1 cement : 3 coarse sand) finished rough with sponge. on external wall surfaces, including scaffolding, curing, etc. upto 10 m height from Ground level, complete all as per specifications and direction of Engineer in Charge.	SQM	765.00		
	Rate in words:				

SL. No.	DESCRIPTION	UNIT	QTY	RATE	AMOUNT
18	Providing and applying neat cement punning to plastered / concrete surfaces, at all levels including all labour, scaffolding, material, plant and machinery. as per direction of Engineer in charge.	SQM	905.00		
	Rate in words:				
19	Providing and fixing factory made ISI marked steel glazed doors, windows and ventilators, side /top /centre hung, with beading and all members such as F7D,F4B, K11 B and K12 B etc. complete of standard rolled steel sections, joints mitred and flash butt welded and sash bars tenoned and riveted, including providing and fixing of hinges, pivots, priming coat of approved steel primer, but excluding the cost of other fittings,glass panes complete all as per approved design, (sectional weight of only steel members shall be measured for payment).				
	Fixing with carbon steel galvanised dash fastener of required dia and size (to be paid for separately)	Kgs	2160.00		
	Rate in words:				
20	Extra for providing and fixing steel beading of size 10 x 10 x 1.6 mm (box type), approved shape and section with screws instead of glazing clipsand metal sash putty, in steel doors, windows, ventilators and composite units.	RMT	73.00		
	Rate in words:				

SL. No.	DESCRIPTION	UNIT	QTY	RATE	AMOUNT
	Unless otherwise specified the rates quoted for all shall include the cost of the following :- Preparation of shop drawing & getting approved from Structural designer a) Receiving all materials unloading and storing at fabrication yard outside the site premises. No Fabrication Yard at Site for Structural Steel. b) Straightening, cutting, fabricating, conveying to work site, hoisting and fixing in position, transportation to site from fabrication yard and shifting and movement within site premises. c) The cost of all materials and labour. d) Work at all heights, levels and situations. e) Providing necessary scaffolding, staging, platforms, ladders etc. and removing. f) Hire charges for necessary hoisting equipments like crane, chain pulley blocks, derricks, winches, screw jacks, hooks, wire ropes etc.				
	g) All necessary fixtures like bolts, washers and nuts. h) Approved quality welding, electrodes like "Phillips" "Advani" "Likon" or " Ador" make or approved equivalent. i) Welding at all heights, levels, conditions and situations. j) Cost of safety belts, goggles, helmets and other necessary safety equipments. k) Preparing the surfaces for painting and also for welding, with one coat of rust convertor to be applied l) Painting with zinc chromate primer before errection & after completion of works final paint with two coats of enamel paint as approved Paint shall be IGBC certified w.r.t Low VOC content (Painting with two coats : 100 - 150 Micron) If the steel section observes any deflects, such as scalling, corrosion etc contractor needs to rectilfy the same with shot blasting copper slag SA 2.5. as surface preparation with no additional cost, Engineer Incharge decision shall be final in this regards				
	m) All the dimension shall be checked with full scale layout n) All weld shall be minimum 8mm thick or thickness of member plate / member thickness which ever is less, unless mentioned otherwise o) MIG welding to be used (Arc Welding is an exception to be used only for tacking)				

SL. No.	DESCRIPTION	UNIT	QTY	RATE	AMOUNT
21	Supplying and fixing in position structural steel work welded in built up sections/framed work including cutting, hoisting, and applying a priming coat of approved steel primer, all complete as per drawings and directions of Engineer in Charge.				
a)	In stringers, treads, landings etc. of stair cases including use of chequered plate wherever required, all complete	Kgs	7000.00		
	Rate in words:				
b)	In gratings, frames, guard bar, ladder, railings, brackets, gates and similar works.	Kgs	700.00		
	Rate in words:				
22	Steel work in built up tubular (round, square or rectangular hollow tubes etc.) trusses etc., including cutting, hoisting, fixing in position and applying a priming coat of approved steel primer, including welding and bolted with special shaped washers etc. complete.				
	Hot finished welded type tubes	Kgs	42500.00		
	Rate in words:				
23	Providing and fixing roofing consist of 0.8 mm thick galvanized steel deck sheet confirming to IS 277:1992 used as permanent shuttering over which MS wire mesh 3 mm laid at 100x100 mm grid including edge trim covered with concrete. This metal deck will be supported on structural steel beam with shear studs. (Structural steel like Beam, column, joists etc. & concrete of different grade as per design will be paid separately).	SQM	650.00		
	Rate in words:				
24	**TERRACE WATERPROOFING**				
	Providing and laying integral cement based water proofing treatment including preparation of surface as required for treatment of roofs, balconies, terraces etc consisting of following operations:				

SL. No.	DESCRIPTION	UNIT	QTY	RATE	AMOUNT
	(a) Applying a slurry coat of neat cement using 2.75 kg/sqm of cement admixed with water proofing compound conforming to IS. 2645 and approved by Engineer-in-charge over the RCC slab including adjoining walls upto 300 mm height including cleaning the surface before treatment.				
	(b) Laying brick bats with mortar using broken bricks/brick bats 25 mm to115 mm size with 50% of cement mortar 1:5 (1 cement : 5 coarse sand) admixed with water proofing compound conforming to IS : 2645 and approved by Engineer-in-charge over 20 mm thick layer of cement mortar of mix 1:5 (1 cement :5 coarse sand) admixed with water proofing compound conforming to IS : 2645 and approved by Engineer-in-charge to required slope and treating similarly the adjoining walls upto 300 mm height including rounding of junctions of walls and slabs (c) After two days of proper curing applying a second coat of cement slurry using 2.75 kg/ sqm of cement admixed with water proofing compound conforming to IS : 2645 and approved by Engineer-in-charge				
	(d) Finishing the surface with 20 mm thick jointless cement mortar of mix 1:4 (1 cement :4 coarse sand) admixed with water proofing compound conforming to IS : 2645 and approved by Engineer-in-charge including laying glass fibre cloth of approved quality in top layer of plaster and finally finishing the surface with trowel with neat cement slurry and making pattern of 300x300 mm square 3 mm deep. (e) The whole terrace so finished shall be flooded with water for a minimum period of two weeks for curing and for final test. “All above operations to be done in order and as directed and specified by the Engineer-in-Charge”:				
	With average thickness of 120 mm and minimum thickness at khurra as 65 mm.	SQM	285.00		
	Rate in words:				
25	Providing and laying water proofing treatment in sunken portion of WCs, bathroom etc., by applying cement slurry mixed with water proofing cement compound consisting of applying :				

SL. No.	DESCRIPTION	UNIT	QTY	RATE	AMOUNT
	(a) First layer of slurry of cement @ 0.488 kg/sqm mixed with water proofing cement compound @ 0.253 kg/ sqm. This layer will be allowed to air cure for 4 hours. (b) Second layer of slurry of cement @ 0.242 kg/sqm mixed with water proofing cement compound @ 0.126 kg/sqm. This layer will be allowed to air cure for 4 hours followed with water curing for 48 hours. The rate includes preparation of surface, treatment and sealing of all joints, corners, junctions of pipes and masonry with polymer mixed slurry.	SQM	15.00		
	Rate in words:				
26	Wall painting with premium acrylic emulsion paint of interior grade, having VOC (Volatile Organic Compound) content less than 50 grams/ litre of approved brand and manufacture, including applying additional coats wherever required to achieve even shade and colour. with 2 coats	SQM	905.00		
	Rate in words:				
27	Finishing walls with Premium Acrylic Smooth exterior paint with Silicone additives of required shade				
	New work (Two or more coats applied @ 1.43 ltr/10 sqm over and including priming coat of exterior primer applied @ 0.90 litre/10 sqm)	SQM	765.00		
	Rate in words:				
28	Finishing with Epoxy paint (two or more coats) at all locations prepared and applied as per manufacturer's specifications including appropriate priming coat, preparation of surface, etc. complete.				
	On Steel	SQM	20.00		
	Rate in words:				
29	Painting with synthetic enamel paint of approved brand and manufacture to give an even shade : Two or more coats on new work	SQM	400.00		
	Rate in words:				

SL. No.	DESCRIPTION	UNIT	QTY	RATE	AMOUNT
30	Providing and injecting approved grout in proportion recommended by the manufacturer into cracks/honey-comb area of concrete/masonry by suitable gun/pump at required pressure including cutting of nipples after curing etc. complete as per directions of Engineer-in-Charge.				
	Stirrer mixed SBR Polymer (of approved make) modified Cement slurry made with Shrinkage Compensating Cement in concrete/RCC work.	Kgs	1000.00		
	Rate in words:				
31	Providing and anchoring in position high strength anchor bolts of grade 5.8 and specified dia and standard lengths including necessary drilling up to150mm depth (min), anchoring and grouting with necessary equipments etc., complete as per specifications of agency approved by Consultants (HILTY or equivalent)				
	16mm dia (heavy duty)	Nos	110.00		
	Rate in words:				
32	Providing and supplying aluminium extruded tubular and other aluminium sections in structural glazing works, as per the architectural drawings and approved shop drawings , the aluminium quality as per grade 6063 T5 or T6 as per BS 1474, including super durable powder coating of 60-80 microns conforming to AAMA 2604 of required colour and shade as approved by the Engineer-in-Charge. (The item includes cost of material such as cleats, sleeves, fasteners screws etc as desired. necessary for fabrication of extruded aluminium frame work. Nothing extra shall be paid on this account).	Kgs	430.56		
	Rate in words:				

SL. No.	DESCRIPTION	UNIT	QTY	RATE	AMOUNT
33	Designing, fabricating, testing, protection, installing and fixing in position semi (grid) unitized system of structural/ curtain wall glazing (with open joints) including the backend structural steel framework wherever required (structural steel shall be paid separately in respective items) for linear as well as curvilinear portions of the building for all heights and all levels, including : a) Structural analysis & design and preparation of shop drawings for the specified design loads conforming to IS 875 Part III for Basic Wind Speed of 55 m/s, Risk Coefficient of 1.08 and Importance factor of 1.15 (the system must passed the proof test at 1.5 times design wind pressure without any failure) and lateral forces as per IS 1893 (The system shall be designed for one higher seismic in which the site location falls and with Importance factor of 1.5), including functional design of the aluminium sections for fixing glazing panels of various thicknesses, aluminium cleats, sleeves and splice plates etc. gaskets, screws, toggles, nuts, bolts, clamps etc., structural and weather silicone sealants, flashings, fire stop (barrier)-cum-smoke seals, microwave cured EPDM gaskets for water tightness, pressure equalization & drainage and protection against fire hazard including:	SQM	20.00		
	b) Fabricating and supplying serrated M.S. hot dip galvanized / Aluminium alloy of 6005 T5 brackets of required sizes, sections and profiles etc. to accommodate 3 Dimensional movement for achieving perfect verticality and fixing structural glazing system rigidly to the RCC/ masonry/structural steel framework of building structure using stainless steel anchor fasteners/ bolts, nylon separator to prevent bimetallic contacts with nuts and washers etc. of stainless steel grade 316, of the required capacity and in required numbers..				
	c) Providing and filling, two part pump filled, structural silicone sealant and one part weather silicone sealant compatible with the structural silicone sealant of required bite size in a clean and controlled factory / work shop environment , including double sided spacer tape, setting blocks and backer rod, all of approved grade, brand and manufacture, as per the approved sealant design, within and all around the perimeter for holding glass				

SL. No.	DESCRIPTION	UNIT	QTY	RATE	AMOUNT
	d) Providing and fixing in position flashings of solid aluminium sheet 1 mm thick and of sizes, shapes and profiles, as required as per the site conditions, to seal the gap between the building structure and all its interfaces with curtain glazing to make it watertight.				
	e) Making provision for drainage of moisture/ water that enters the curtain glazing system to make it watertight, by incorporating principles of pressure equalization, providing suitable gutter profiles at bottom (if required), making necessary holes of required sizes and of required numbers etc. complete. This item includes cost of all inputs of designing, labour for fabricating and installation of aluminium grid, installation of glazed units, T&P, scaffolding and other incidental charges including wastages etc., enabling temporary structures and services, cranes or cradles etc. as described above and as specified. The item includes the cost of getting all the structural and functional design including shop drawings checked by a structural designer, dully approved by Engineer-in-charge.				
	The item also includes the cost of all mock ups at site, cost of all samples of the individual components for testing in an approved laboratory, field tests on the assembled working structural glazing as specified, cleaning and protection till the handing over of the building for occupation. In the end, the Contractor shall provide a water tight structural glazing having all the performance characteristics etc. all complete as required, as per the Architectural drawings, as per item description, as specified, as per the approved shop drawings and as directed by the Engineer in-Charge.				
	Note:- 1. The cost of providing extruded aluminium frames, shadow boxes, extruded aluminium section capping for fixing in the grooves of the curtain glazing and vermin proof stainless steel wire mesh shall be paid for separately under relevant items under this subhead. However, for the purpose of payment, only the actual area of structural/ curtain wall glazing (including width of grooves) on the external face shall be measured in sqm. up to two decimal places.				
	Rate in words:				

SL. No.	DESCRIPTION	UNIT	QTY	RATE	AMOUNT
34	Providing, assembling and supplying vision insulated glass panels (IGUs) comprising of hermetically-sealed **6-12-6 mm** insulated glass (double glazed) vision panel units of size and shape as required and specified, comprising of an outer toughened/heat strengthened (as approved) glass 6mm thick, of approved colour and shade with reflective soft coating on surface # 2 of approved colour and shade, an inner toughened/heat strengthened(as approved) clear float glass 6mm thick, spacer tube 12mm wide, desiccants, including primary seal and secondary seal (structural silicone sealant) etc. all complete for the required performances, as per the Architectural drawings, as per the approved shop drawings, as specified and as directed by the Engineer-in-Charge. The IGUs shall be assembled in the factory/ workshop of the glass processor. (Payment for fixing of IGU Panels in the curtain glazing is included in cost of **item No.1.18.2** above). For payment, only the actual area of glass on face # 1 of the glass panels (excluding the areas of the grooves and weather silicone sealant) provided and fixed in position, shall be measured in sqm. (To be fixed on extruded aluminium sections. and cost of aluminium sections to be paid in relevant item)	SQM	20.00		
	High performance Colored toughened / heat strengthened(as approved) glass 6mm thick clear substrate with double silver reflective soft coating on face-2 surface, + 12mm Air gap + 6mm clear toughened / heat strengthened(as approved) Glass of approved make having properties as visible Light transmittance (VLT) of more than or equal to 40%, Light reflection internal 12%, light reflection external 23 %, SHGC less than 0.25 and U value of less than OR equal to 1.80 W/m^2 degree K etc. The properties of performance glass shall be decided by technical sanctioning authority as per the site requirement. Approval of better property glass shall not be payable extra				
	Rate in words:				

SL. No.	DESCRIPTION	UNIT	QTY	RATE	AMOUNT
35	Extra for openable side / top hung vision glass panels (double/ single glass units) including providing and supplying at site all accessories and hardware for the openable panels as specified and of the approved make such as heavy duty stainless steel friction hinges, min 4 - point cremone locking sets with stainless steel plates, handles, buffers etc. including necessary stainless steel screws/ fasteners, nuts, bolts, washers etc. all complete as per the Architectural drawings, as per the approved shop drawings, as specified and as directed by the Engineer in-Charge..	SQM	5.00		
	Rate in words:				
36	Providing and fixing aluminium work for doors, windows, ventilators, louvers, fins and partitions with extruded built up standard tubular sections/ appropriate Z sections and other sections of approved make conforming to IS: 733 and IS: 1285, fixing with dash fasteners of required dia and size, including necessary filling up the gaps at junctions, i.e. at top, bottom and sides with required EPDM rubber/ neoprene gasket etc. Aluminium sections shall be smooth, rust free, straight, mitred and jointed mechanically wherever required including cleat angle, Aluminium snap beading for glazing / panelling, C.P. brass / stainless steel screws, all complete as per architectural drawings and the directions of Engineer-in-charge. (Glazing, panelling and dash fasteners to be paid for separately) :				
a)	For fixed portion				
	Powder coated aluminium (minimum thickness of powder coating 50 micron)	Kgs	10.00		
	Rate in words:				
37	For shutters of doors, windows & ventilators including providing and fixing hinges/ pivots and making provision for fixing of fittings wherever required including the cost of EPDM rubber / neoprene gasket required (Fittings shall be paid for separately)				
	Powder coated aluminium (minimum thickness of powder coating 50 micron)	Kgs	10.00		
	Rate in words:				

SL. No.	DESCRIPTION	UNIT	QTY	RATE	AMOUNT
38	Providing and fixing Fiber Glass Reinforced plastic (FRP) Door Frames of cross-section 90 mm x 45 mm having single rebate of 32 mm x 15 mm to receive shutter of 30 mm thickness. The laminate shall be moulded with fire resistant grade unsaturated polyester resin and chopped mat. Door frame laminate shall be 2 mm thick and shall be filled with suitable wooden block in all the three legs. The frame shall be covered with fiber glass from all sides. M.S. stay shall be provided at the bottom to steady the frame.	Mtr	18.00		
	Rate in words:				
39	30 mm thick Fiberglass Reinforced Plastic (F.R.P.) flush door shutter in different plain and wood finish made with fire retardant grade unsaturated polyester resin, moulded to 3mm thick FRP laminate all around, with suitable wooden blocks inside at required places for fixing of fittings and polyurethane foam (PUF) /Polystyrene foam to be used as filler material throughout the hollow panel, casted monolithically with testing parameters of F.R.P. laminate conforming to table - 3 of IS: 14856, complete as per direction of Engineer-in-charge.	SQM	6.50		
	Rate in words:				
40	Supplying and installation of moisture resistant/fire resistant cement board as per standard sizes fixed with self-drilling / taping screws. Screws shall be of counter sunk rib head of 1.60 mm to 4 mm thick or 8 to 10 gauge of length varying from 25 to 45 mm.				
	Cement Bonded particle board 8 mm thick (Termite, Fire & Moisture Resistance), as per IS:14276 : 1995	SQM	9.00		
	Rate in words:				
	Total Part A				

Name of Work: HI RES LAB - Conversion of Boat shed area into lab area at RRI Campus, Bengaluru

SCHEDULE OF QUANTITIES

SL. No.	DESCRIPTION	UNIT	QTY	RATE	AMOUNT
	Important Note: For approved makes materials refer annexure attached along with SOQ. The make shall be adopted as per the sequence provided in the approved makes. In case the first approved make is not available, approval may please be taken subsequent of makes.				
	PART B - PH WORKS				
1	Supply, installation, fixing, testing and commissioning of approved colour **Wall mounted - European water closet with Concealed cistern** having dual flush (3 / 6 lts capacity as per LEED requirement, with all internal parts of the cistern for efficient functioning), with back inlet P or S trap by using conversion bend. The closet is mounted with GI Rag bolts and nuts, with 110 mm dia straight type syphon UPVC WC pan connector with neoprene rubber ring, 15 mm necessary valves, solid duroplast or scratch resistant seat and cover with special polythene buffer and flap, hinges to suit Wall mounting water closet complete etc, filling with necessary sealants all of approved make as directed by EIC.	Nos.	3.00		
	Rate in words:				
2	Supply, installation, fixing, testing and commissioning of 15 mm **CP health faucet** of approved make with necessary CP flexible hose 1000 mm long & nozzle, CP wall flange, etc., complete.	Nos.	3.00		
	Rate in words:				
3	Supply, installation, fixing, testing and commissioning of approved make 15 mm **CP brass 2 Way angle Cock** of approved make. **At Health faucet location**	Nos.	3.00		
	Rate in words:				
4	Supply, installation, fixing of **CP twin coat hook/Robe hook** fixed with necessary ss screws, and clamps etc., complete. toilet door.as directed by EIC	Nos.	3.00		
	Rate in words:				

SL. No.	DESCRIPTION	UNIT	QTY	RATE	AMOUNT
5	Supply,installation, fixing, testing & commissioning of approved make of 15 mm dia **CP angle cocks for**, Complete.	Nos.	5.00		
	Rate in words:				
6	Supply, installation, fixing, testing and commissioning of approved colour & size**-Above counter/ semi counter/ wall mounted wash basin with the Pillar cock.** The basin is mounted over GI rag bolts and the basin is fitted with the following CP brass fittings like 32 mm CP brass waste coupling, CP brass bottle trap of casted type with 300 mm extension pipe, 40 mm OD PVC waste pipe concealed in wall and taken unto floor trap with necessary specials, with wall flange 2 No's and 15 mm x required long PVC flexible hose inlet connecting pipe with end nuts for the Cold & hot water connections etc & filling with necessary sealants., complete all of approved make. Supply and fixing of granite counter shall be done by the external agency. (40mm OD PVC waste pipe will be measured and paid separately in the relevant item) as directed by EIC.	Nos.	2.00		
	Rate in words:				
7	Supply, installation, fixing **liquid Soap dispenser** of approved make of suitable capacity of with necessary fixing materials etc. Complete	Nos.	2.00		
	Rate in words:				
8	Supply, installation, fixing approved make **CP towel ring** fixed on to wall by using with SS screws as directed by EIC.	Nos.	2.00		
	Rate in words:				
9	Supply, installation, fixing of **CP toilet paper holder** fixed with counter sunk SS screws complete as directed by EIC.	Nos.	3.00		
	Rate in words:				
10	Supply, installation, fixing, testing and commissioning of **125 mm x 125 mm floor grating of CP ring and grate** with necessary fixing materials and cement concrete all-round the trap for collection of Waste water etc., complete for following.	Nos.	5.00		
	Rate in words:				

SL. No.	DESCRIPTION	UNIT	QTY	RATE	AMOUNT
11	Supply, installation, fixing, testing and commissioning of **100mm X 100mm floor grating of CP ring and grate** with necessary fixing materials and cement concrete all-round the trap for collection of Waste water etc., complete. **For Balcony**	Nos.	2.00		
	Rate in words:				
12	Supply, installation, fixing, testing and commissioning of **125 mm x 125 mm sealed urinal floor traps with Nickel Bronze clenout ring** and disc with three SS screw & necessary fixing materials and cement concrete all-round the trap for collection of Waste water etc., complete for following.	Nos.	1.00		
	Rate in words:				
13	Supply, installation, fixing, testing and commissioning of approved make **white colour glazed back inlet type glazed urinals** with SS bolts and nuts to fix the urinal with all hangers and brackets, including dome type waste coupling, 32 mm bottle trap, CP spreader, CP valves CP connecting tube complete with wall flanges & filling with necessary sealants as directed by EIC.	Nos.	2.00		
	Rate in words:				
14	Supply, installation, fixing, testing and commissioning of **Electronic auto flush system to urinal with infrared sensor,** solenoid valve, gate valve, black box and necessary wiring in conduit from solenoid value to black box and to mains complete.as directed by EIC	Nos.	2.00		
	Rate in words:				

SL. No.	DESCRIPTION	UNIT	QTY	RATE	AMOUNT
15	Supplying, fixing and testing of **uPVC soil, waste (SWR)** confirming to IS 13592 : 1992, **type B** with solvent joint inclusive of all necessary specials like elbow, bends, tees, offsets, door ends, junctions, cowls, clean outs, end caps etc., laid under floor/ under ceiling /fixed on walls and in pipe shafts etc., complete. The quoted rate should include necessary hanger supports, GI 'U' clamps with bolts, nuts and GI washers, chasing the walls, making bore in walls, and making good the chased surfaces and bores, curing etc. Complete. **Internal Toilets & GF toilets pipes in basements with Solvent Joint & at locations wherever directed by EIC**				
	a) 160 mm dia	Rmt	5.00		
	Rate in words:				
	b) 110 mm dia	Rmt	50.00		
	Rate in words:				
	c) 75 mm dia	Rmt	50.00		
	Rate in words:				
16	Supplying, fixing and testing **uPVC pressure pipes (6 Kg / Sq cm)** confirming to IS 4985 selfit type for waste connection from wash basin to floor trap / floor drain, anti syphonage pipe with solvent cement joints, including necessary specials like bends, tees, offsets, door ends, junctions etc, laid in sunken slab etc., the work shall include wall chase and making good the same in cement mortar etc., complete. The quoted rate should include necessary hanger supports, GI 'U' clamps with bolts, nuts and GI washers, chasing the walls, making bore in walls, and making good the chased surfaces and bores, curing etc. Complete. **Internal Toilet with Solvent Joints & at locations wherever directed by EIC**				
	a) 40mm dia (I.D.)	Rmt	5.00		
	Rate in words:				
	b) 50mm dia (I.D.)	Rmt	5.00		
	Rate in words:				

SL. No.	DESCRIPTION	UNIT	QTY	RATE	AMOUNT
17	Supply, fixing and testing of **uPVC rain water down take pipes Type A (SWR)** confirming to IS 13592 : 1992, with solvent joint inclusive of all necessary specials like clean outs, bends, tees, offsets, door ends, junctions, cowls, etc., laid under floor/ under ceiling /fixed on walls, and in pipe shafts etc., complete. The quoted rate should include necessary, scaffolding, MS Brackets of suitable size, GI 'U' bolts, nuts and GI washers, chasing the walls, making bore in walls, and making good the chased surfaces and bores, curing etc., complete.				
	a) 160 mm dia	Rmt	5.00		
	Rate in words:				
	b) 110 mm dia (Vertival Downtake Pipe)	Rmt	60.00		
	Rate in words:				
	b) 75 mm dia	Rmt	5.00		
	Rate in words:				
18	Supplying, fixing and testing of floor drain with **110mm dia PVC deep seal 'P' trap** with 75mm dia outlet fixing with necessary supports, cement mortar & complete etc.,	Each	1.00		
	Rate in words:				
19	Supplying, fixing and testing of approved make **110 mm x 75 mm dia uPVC 125mm deep with 55mm water seal multi inlet floor trap** of self-cleansing design moulded or fabricated with necessary structural supports fixed on a bed of cement, concrete, etc.& complete	Each	7.00		
	Rate in words:				

SL. No.	DESCRIPTION	UNIT	QTY	RATE	AMOUNT
20	Supplying, installing, fixing, jointing, testing and commissioning of approved make **Chlorinated Polyvinyl Chloride pipes (CPVC) up to 50 mm dia** shall be SDR.11 with ASTM CTS fittings and above 50 mm dia shall be CPVC schedule 40 ASTM IPS with SCHD 80 ASTM F 439 fittings. The fittings and specials for SDR 11 such as tees, elbows, couplers, bends, enlargers etc., with CPVC brass threaded combination / transition specials such as male adapters brass threaded female adapters, brass FPT Tee, elbows, bends etc., The specials & fittings for Sch 40 pipe such as couplers, elbows, tees, unions, hex adaptor, end plug & caps, pipe clip & bend 90 etc., where connection with metal is to be made including necessary **drilling holes, chasing walls and making the same good in cement mortar 1 : 1 restore the same original condition neatly as directed by the Engineer in-charge**. Joints to be made with CPVC solvent cement up to 50 mm dia as per ASTM D-2846 and above 50 mm dia primer P - 70, and solvent confirming to ASTM F - 493 / 724. Hanger supports, GI 'U' clamps with bolts, nuts and GI washers to be considered for internal piping (above false ceiling area) locations wherever directed by EIC				
	a) 20 mm dia	Rmt	40.00		
	Rate in words:				
	b) 25 mm dia	Rmt	100.00		
	Rate in words:				
	c) 32mm dia	Rmt	15.00		
	Rate in words:				
21	Supplying, installing and testing of approved make **Lever operated Forged brass ball valves (PN 25)** made of forged brass body, hard chrome plated forged brass ball, PTFE body seat ring, washer and gland packing, MS zinc plated handle with PVC cover, male threaded adapters, teflon tape with all consumables etc., complete in all respects.				
	a) 20 mm dia	Nos	2.00		
	Rate in words:				

SL. No.	DESCRIPTION	UNIT	QTY	RATE	AMOUNT
22	Construction of **inspection chamber** with 230 mm thick best quality masonry blocks in CM 1 : 4 laid over a bed of 150 mm thick PCC 1 : 4 : 8, walls plastered smooth, internal plastering 12 mm thk in CM 1 : 3 and external plastering 12 mm thick in CM 1 : 6 including finishing smooth inside surface of the chamber with cement rendering, curing etc. The quoted rate to include excavation in all types of soil, necessary wooden / steel form work, back filling of the chamber sides with the excavated soil, disposing of the surplus earth after back filling with initial lead of 30 metres or as directed, including, lift, benching and channelling shall be finished smooth, in PCC 1 : 2 : 4. Providing and fixing of Precast RCC manhole frame and cover, set in PCC 1 : 2 : 4 with Thermo plastic moulded steps for chambers beyond 900 mm dept.\h etc., complete as per specifications and drawings or as instructed from EIC. For following sizes :				
	a) Inside size of 600 x 600 mm & depth not exceeding 1000 mm	Each	1.00		
	Rate in words:				
23	Supplying, fixing and testing **PVC gully trap** chamber of internal size 300 mm x 300 mm with rebated top square shape 150 mm x 150 mm x100 mm dia outlet set in 75 mm thick PCC 1 : 4 : 8 bed, construction of 230 mm thick masonry chamber in CM 1 : 4, with internal plastering of 12 mm thk in CM 1 : 3 and external plastering 12 mm thick in CM 1 : 6, including finishing smooth inside surface of the chamber with cement rendering with necessary benching and channelling, supply and fixing of 450 mm x 450 mm size CI frame and cover (weight of frame and cover not less than 10 Kgs.) / FRP Cover set in PCC 1 : 2 : 4 as per the detailed drawing .The quoted rate shall also include necessary excavation, backfilling, ramming, disposing off surplus earth etc., complete as per specifications & drawing or as instructed from EIC.	Each	1.00		
	Rate in words:				

SL. No.	DESCRIPTION	UNIT	QTY	RATE	AMOUNT
24	Construction of **catch basin** of following size using 230 mm thick best quality masonry blocks in CM 1 : 4 laid over a bed of 150 mm thick PCC 1 : 4 : 8, walls plastered smooth, internal plastering 12mm thk in CM 1 : 3 and external plastering 12mm thick in CM 1 : 6 including finishing smooth inside surface of the chamber with cement rendering, curing etc. The quoted rate to include excavation in all types of soil, necessary wooden/steel form work, back filling of the chamber sides with the excavated soil, disposing of the surplus earth after back filling with initial lead of 30 metres or as directed, including lift. Providing and fixing of Precast RCC cover / RCC grating and cover, set in PCC 1 : 2 : 4. The top surface of the catch basin grating shall be flushed to the flooring level and making suitable outlet arrangement to lateral drain with necessary arrangements etc., complete as per specifications and drawings or as instructed from EIC				
	a) Inside size of 450 x 450 mm & depth not exceeding 600 mm	Each	4.00		
	Rate in words:				
	b) Inside size of 600 x 600 mm & depth not exceeding 1000 mm	Each	1.00		
	Rate in words:				
25	Supplying, fixing and testing of **uPVC soil, waste (SWR)** confirming to IS 13592 : 1992, **type B** with rubber joint inclusive of all necessary specials like bends, tees, offsets, door ends, junctions, cowls, clean outs, end caps etc., laid under floor/ under ceiling /fixed on walls and in pipe shafts etc., complete. The quoted rate should include necessary MS supports like hanger supports, GI 'U' bolts, nuts and GI washers, chasing the walls, making bore in walls, and making good the chased surfaces and bores, curing etc. Complete. **Piping with rubber ring joint & at locations wherever directed by EIC**				
	a) 160mm dia	Rmt	5.00		
	Rate in words:				
	b) 110mm dia	Rmt	5.00		
	Rate in words:				
	c) 75mm dia	Rmt	10.00		
	Rate in words:				

SL. No.	DESCRIPTION	UNIT	QTY	RATE	AMOUNT
26	Excavation in all types of soil for laying water supply and sewerage pipes upto 200 mm dia. including forming bottom surface to required level, refilling with selected excavated earth around the pipe in layers 150mm thick, watering, consolidating and disposing off the surplus earth within the site as directed by the engineer with a lead of 200M etc., complete.	Cum	20.00		
	Rate in words:				
27	Supplying, installing and testing of approved make **Lever operated Forged brass ball valves (PN 25)** made of forged brass body, hard chrome plated forged brass ball, PTFE body seat ring, washer and gland packing, MS zinc plated handle with PVC cover, male threaded adapters, teflon tape with all consumables etc., complete in all respects.				
	a) 25 mm dia	Nos	1.00		
	Rate in words:				
	b) 32 mm dia	Nos	1.00		
	Rate in words:				
28	Supplying, installing, testing and commissioning of approved make **Brass non - return valve of Spring loaded PN 10** with unions, & other accessories etc., complete.				
	a) 25 mm dia	Nos	1.00		
	Rate in words:				
29	Providing & fixing suction CI body **`Y' strainer** with MS flange of suitable length fabricated from 16 gauge SS sheet with 3 mm slots with necessary nuts and bolts, neoprene rubber gaskets, flanges etc, complete.				
	a) 25 mm dia	Nos	1.00		
	Rate in words:				
30	Supply,installation, and fixing of **RECTANGLUR Sintex tank** of approved make with necessary accessories like valves, with sleeves at inlet, outlet, overflow and drain pipe. Tank should be RECTANGLUR / circular type with closed top having acess manhole at top with lid etc., complete	Nos	1.00		
	a) 1500 lts capacity				
	Rate in words:				

SL. No.	DESCRIPTION	UNIT	QTY	RATE	AMOUNT
31	Supply, Installation, Testing & Commissioning of Electronic Liquid Level controller assembly of approved make consisting of digital water level indicator/magnectic float, in-built alarm, continuous display indicating Full, 3/4, 1/2, 1/4 and low level located in OHT . Rate quoted should include for Supply, Laying & Testing of armoured copper cable from to Pump pannel to OHT. Approved control panel will be located in pump . Wiring from the control panel to level sensor & LED display operation ON/OFF(AUTO /MANUAL) indicator etc., complete in all respect. (for Domestic UGT & OHT).				
a)	Depth of Overhead Tank: Approx-2m.	Nos	1.00		
	Rate in words:				
b)	Domestic OHT (200 mts cable with conduit assumed)	Lot	1.00		
	Rate in words:				
	Total Part B				

Name of Work: HI RES LAB - Conversion of Boat shed area into lab area at RRI Campus, Bengaluru

SCHEDULE OF QUANTITIES

SL. No.	DESCRIPTION	UNIT	QTY	RATE	AMOUNT
	PART C - ELECTRICAL WORKS				
1	Supply of following size of 1.1 KV grade, XLPE insulated, and FRLS-PVC overall sheathed, stranded Aluminium conductor, flat steel strip armoured cables conforming to IS:7098/Part - I (with latest amendments). The cables/drum shall bear ISI certification mark				
a)	4 Core x 25 Sq. mm	Mts	50.00		
	Rate in words:				
b)	3.5 Core x 50 Sq. mm	Mts	50.00		
	Rate in words:				
2	Supply of multi core, stranded copper conductor, PVC insulated, FRLS-PVC overall sheathed, armoured (flat steel strip/wire armoured) / unarmoured cable, 1.1kV grade, for following sizes complete as required. The Cable shall bear ISI certification mark.				
a)	3 Core x 6 Sq. mm	Mts	50.00		
	Rate in words:				
3	Laying of 2 / 3 / 3.5 / 4 core , 1.1 kV grade FRLS cables XLPE cables armoured / unarmoured, aluminum /copper conductor cable in existing trench/on cable tray, on wall/floor/ceiling/ above false ceiling / below false floor / existing Hume pipe / existing HDPE pipe including transportation of cable to site,				
a)	4 Core x 25 Sq. mm	Mts	50.00		
	Rate in words:				
b)	3 Core x 6 Sq. mm	Mts	50.00		
	Rate in words:				
c)	3.5 Core x 50 Sq. mm	Mts	50.00		
	Rate in words:				
4	End Terminations of LT Cables: Providing end terminations for 2 / 3 / 3.5 / 4 core, 1.1kV grade PVC/ XLPE insulated armoured / unarmoured, copper /Aluminum conductor cables including supply of Cable gland lugs, neoprene bushes and other materials and tools required complete with terminal connections, earthing of glands and as required and as directed by EIC				

SL. No.	DESCRIPTION	UNIT	QTY	RATE	AMOUNT
a)	4 Core x 25 Sq. mm	Nos	4.00		
	Rate in words:				
b)	3 Core x 6 Sq. mm Copper	Nos	4.00		
	Rate in words:				
c)	3.5 Core x 50 Sq. mm	Nos	2.00		
	Rate in words:				
5	Supply, Installation, Testing and Commissioning of MCB Distribution board as per approved installation dwgs. Wall mounted MCB DBs with MS wire way box on top / bottom & on sides. MCBs shall be rated for 10kA with current limiting feature. Dummy ways to be covered with blank plates. All out going ways shall be labelled & laminated.				
	Enclosure:1.2mm CRCA Sheet Steel, Powder Coated Door : Double Door Protection : IP 42 Cable Entry : Top & Bottom For UPS distribution ELCB's shall be harmonic resistant (Hi Series) Bus bar : Shall be tinned Copper and 200% rating for UPS DB Neutral Link MCB's : 10kA 'C' Curve for Lighting, 10kA 'C' Curve for Raw power, 10kA 'D' Curve for UPS Distribution, 10kA RCCB/RCBO.				
	Note: 1) Separate Earth bus/Neutral bus for each phase. 2) Each Circuit shall have yellow ferrules with circuit number. 3) Accessories required for installation of DB's on Wall/Column/Gyp Board shall be considered. 4) DB's shall be covered with powder coated (paint should match with DB Color) wire ways all around and up to ceiling to receive incoming circuits. 5) Laminated A3 OR A4 size SLD copy shall be pasted inside DB door. 6) Safe shroud for Neutral link shall be provided. 7) All the RCCB, MCB should fit in the DB, consider accordingly ETPN/7 segment. 8) DB labelling should be done for all the DBs.				
a)	LPDB - 7 Segment				
	8 Way TPN MCB DB				
	Incomer : 1No. 63A, 4P, MCB of 'C' curve & 3Nos 40A DP RCBO 30mA				
	Outgoing : 18 Nos. 10/16A SP MCB of 'C' curve	Nos.	2.00		

SL. No.	DESCRIPTION	UNIT	QTY	RATE	AMOUNT
	Rate in words:				
b)	ELDB - SPN				
	8 Way SPN MCB DB				
	Incomer : 1No. 32A DP RCBO 30mA				
	Outgoing : 6 Nos. 10A SP MCB of 'D' curve	Nos.	1.00		
	Rate in words:				
c)	MAIN POWER DB - VTPN				
	12 Way Vertical TPN MCB DB				
	Incomer : 1No. 100A, 4P, MCB of 'C' curve				
	Outgoing : 3 Nos. 63A 4P MCB of 'C' curve & 2Nos 32A DP MCB D curve	Nos.	1.00		
	Rate in words:				
6	Circuit mains using 1.1kV grade FRLS PVC insulated copper conductor (MSCC) wires / FRLS PVC insulated PVC sheathed Multi core cables drawn in 2mm thick FRLS PVC rigid conduit or in existing raceway. Rates quoted shall include supply of wires & excluding conduits, other conduiting accessories. Circuit mains shall be measured from respective DB to the nearest point. All circuit terminations shall be provided with solder less crimping type copper sockets / lugs, ferrules indicating source code on load side & load code on source side. There shall not be any joints in the circuits, only looping is allowed in terminal blocks & at points.				
	NOTE: 1) Conduits running above false ceiling in multiples shall be supported by Slotted GI 'C' channel at distance not more than 0.5mtrs intervals. OR else with spacers & saddles at an intervals of 0.5mtrs. 2) Accessories shall includes Bends, Collars, junction boxes, Spacers, saddles, screws, Flexibles. 3) Conduits shall be ISI marked. 4) The number of cable drawn in each conduit shall be as per IS 694 code. 5) No different phases shall be drawn in same conduit. 6) Conduit joints shall be done with threading & proper accessories only				
6.1	Lighting & Emergency Lighting Circuit				

SL. No.	DESCRIPTION	UNIT	QTY	RATE	AMOUNT
	Supply and wiring with two runs of FRLSH 1.5 sq.mm,1.1 kV grade PVC insulated, single core, multi strand Copper conductor cable conforming to IS:694 (with latest amendments) in 20 mm dia. electrical Grade PVC conduit concealed in wall or ceiling or floor and earthing with one run of FRLSH 1.5sq.mm, 1.1 kV grade, ISI marked, PVC insulated single core, multi strand Copper conductor cable (Green colour) run continuously inside the conduit including supply of all fixing materials, accessories and interconnections complete as required.	Mts.	350.00		
	Rate in words:				
7	UPS & RP Circuit :				
	Supply and wiring with two runs of FRLSH 4 sq.mm ,1.1 kV , PVCminsulated, single core, multi strand Copper conductor cable conforming to IS:694 (with latest amendments) in 25 mm dia. electrical Grade PVC conduit concealed in wall or ceiling or floor and earthing with one run of FRLSH 4sq.mm, 1.1 kV grade, ISI Marked PVC insulated single core, multi strand Copper conductor cable(Green colour) run continuously inside the conduit including supply of all fixing materials, accessories and interconnections complete as required.	Mts.	450.00		
	Rate in words:				

SL. No.	DESCRIPTION	UNIT	QTY	RATE	AMOUNT
8	Supply and wiring for primary light point with FRLSH 1.5sq.mm, 1.1kV grade, ISI marked, PVC insulated single core, multi strand Copper conductor cable conforming to IS:694 (with latest amendments) in 20 mm dia. 16 SWG MS conduit concealed in ceiling or wall or column or floor including supply & fixing of 1No. 6 Amp single pole modular switch for control suitable for 230V, 50Hz AC supply, fixed in suitable size metallic flush modular boxes suitable for modular switches and covered with modular switch plate and earthing with 1 Run of FRLSH 1.5, Sq.mm1.1kV grade, ISI marked, PVC insulated single Copper Core multi strand conductor cable (Green Colour) run inside the conduit including supply of all fixing materials, accessories and interconnections complete as required. Note: 1) Rates for all the point wiring items are inclusive of necessary circuit mains from the distribution board to the first switch board and also sub circuits from one switch board to the Subsequent switch boards in the same circuit. 2) All the Chases made in the wall, ceiling, etc., at the time of laying of conduits, fixing switch boards shall be filled up neatly after erection of conduit.	Nos.	37.00		
	Rate in words:				
9	Supply and wiring generally same as item no.1.1 above, but without control switch. The wiring shall include necessary wiring interconnected from the primary light point as indicated in the electrical layout drawings.	Nos.	48.00		
	Rate in words:				

SL. No.	DESCRIPTION	UNIT	QTY	RATE	AMOUNT
10	Supply and wiring of ceiling fan point with FRLSH 1.5sq.mm, 1.1kV grade, ISI marked, PVC insulated, single core, multi strand copper conductor cable conforming to IS:694 (with latest amendments) in 20 mm dia. 16 SWG MS conduit concealed in ceiling or wall or column or floor including supply & fixing of 1no. 6Amp Modular type control switch along with modular type 120W, 5 steps electronic fan speed regulator suitable for BLDC fans (2 Module) fixed in box of suitable size metallic flush modular type boxes with modular switch plate and earthing with 1 Run of FRLSH 1.5sq.mm, 1.1kV grade, ISI marked, PVC insulated single Copper core, multi strand conductor cable (Green Colour) run inside the supply of all fixing materials, accessories like fan hook box/ MS rod, U hook in roof slab, terminal block, inter connections complete as required. Note: In case of roof slab MS rod "U" hooks shall be provided in place of fan hook box.	Nos.	32.00		
	Rate in words:				
11	Supply and wiring generally same as item No.1.1 above, but for exhaust fan point but including supply and fixing of ceiling rose near to the exhaust fan complete as required.	Nos.	5.00		
	Rate in words:				
12	Supply, Installation, Testing and Commissioning of the following Modular/Industrial Switch, sockets with modular front plate, and accessories as per the site conditions. The quoted rate for power socket outlets shall include a. Socket outlets - Round pin/UNIVERSAL sockets b. Switches c. 20SWG metal boxes with knockout on all sides d. Front plate of required colours with accessories				

SL. No.	DESCRIPTION	UNIT	QTY	RATE	AMOUNT
	Industrial type sockets shall be of Polycarbonate body with plug top. All switch / sockets shall be provided with printed labels / stickers indicating source code. Colour code for UPS socket plates : White/ as per architect. Colour code for RP socket plates : Black/Grey/ as per architect. All switch / sockets including front plate & frame which will be mounted on the metal boxes shall have removable film coat to protect from scraches & paint during installation. - excluding Cabling with 3C x 2.5 Sqmm FRLS 1100V unarmoured double insulated flexible multicore cable of white / Black colour				
	Note: Safety shutters to prevent accidental contact with live parts shall be provided. No indicator shall be provided for switches. All terminations in modular sockets have to be done with proper lugs only. Socket testing (Voltage, N-E earth voltage) in UPS network. With Metal box on Floor/Wall/Ceiling/Raceways				
a)	1x6/16A universal socket controlled by 16A switch	Nos.	45.00		
	Rate in words:				
13	Supply, installation, testing & commissioning of GI/Cu earth strips below ground as per site condition. All Cu. Strips shall be run in PVC heat shrinkable sleeve. Cost of civil works shall be included for strips laid below ground. Including connection/ terminating with nut, bolt, spring, washer etc. as required. Jointing shall be done by overlapping and with 2 sets of brass nut bolt & spring washer spaced at 50mm. Joints to be welded for GI and brasing for copper strips. Electrical vendor need to visit the site for all earth pit location and to find the routing.				
	Supply, laying, and connection of hot-dip galvanized earth flats and stranded GI wires of specified sizes shall be carried out for safety earthing, in accordance with the enclosed specifications and drawings. The conductors shall be laid in ground, trenches, cable trays, or routed through pipe sleeves, as per site conditions.				

SL. No.	DESCRIPTION	UNIT	QTY	RATE	AMOUNT
	A. Jointing Method: All conductor joints shall be welded to ensure mechanical integrity and electrical continuity. **B. Protection of Welded Joints:** **B.1-Below grade slab/screed:** Welded joints shall be protected using bitumen paint and Hessian tape. **B.2-Above grade slab:** Exposed joints shall be coated with rust-inhibiting paint to prevent corrosion. **C- Equipment Termination:** Connections to equipment shall be made using GI bolts and nuts of approved quality. **D-Galvanizing Requirements:** The galvanizing thickness of earth flats and strips shall be not less than 700 GSM/sq.m, ensuring long-term corrosion resistance. Factory test reports confirming galvanizing quality and coating thickness shall be submitted for review and approval. **E- Exclusions:** Quantities related to cable tray and raceway earthing are excluded from this section and shall be covered under their respective BOQ line items.				
	Technical Parameters for GI Tapes (OEM Compliance) **The GI tapes supplied shall conform to the following mandatory requirements**: **1. Mechanical Properties- As per IS 2062:2011 Grade E250 Quality A Material .** A.Tensile Strength B.Yield Strength C.Elongation on Gauge Length D.Bend Test. **2. Chemical Composition** **The material shall be tested for the following elements:** A.Carbon B.Manganese (Note: Magnesium is not typically part of IS 2062; likely intended to be Manganese) C.Sulphur D.Phosphorus E.Silicon. **3. Galvanizing Tests As per IS 4759:1996 and related standards:** **A.Mass of Zinc Coating** – As per IS 6745 / IS 4759. **B.Uniformity of Galvanized Coating** – As per IS 2633 / IS 4759. **C.Adhesion of Galvanized Coating** – As per IS 2629 / IS 4759 (Pivoted Hammer Method).				
	D.Zinc Coating Thickness – Measured by electrometer as per IS 4759 / IS 4736				

SL. No.	DESCRIPTION	UNIT	QTY	RATE	AMOUNT
	Supply, laying, and connection of electrolytic grade 99.9% copper earth flats, flexible cables, and wires of specified sizes shall be carried out for equipment neutral and electronic equipment earthing. The installation shall be executed either directly in ground or routed through pipe sleeves, cable trays, or preformed trenches, depending on site conditions and routing requirements. **A.Jointing Method:** All joints of copper conductors shall be brazed or riveted to ensure mechanical strength and electrical continuity. **B.Equipment Termination:** Connections at equipment ends shall be made using passivated hardware to prevent corrosion and ensure long-term reliability. **C.Panel Integration:** Where earth strips are routed inside switchgear panels, they shall be mounted on conical-type DMC bus bar supports for insulation and mechanical stability. **D.Neutral Earthing:** Neutral earth connections shall be sleeved and run over insulators to maintain isolation and prevent accidental contact.				
	Technical Parameters for Copper Tapes (OEM Compliance) **The copper tapes supplied shall meet the following mandatory requirements as per IS/IEC 62561-2:2018:** **A.Electrical Resistivity Test-** Maximum value: 0.018 micro-ohm meter Standard: IS 62561-2:2018. **B.Tensile Strength** Range: 200 to 450 N/mm² Reference: Clause 5.3.7.2, Table 2 of IEC 62561-2:2018. **C.Salt Mist Cyclic Test** Minimum duration: 3 days Standard: IEC 62561-2:2018 **Purpose: To evaluate corrosion resistance under saline conditions.** **D.Humid Sulphurous Atmosphere Test** Test cycle: 24 hours total 8 hours exposure in test cabinet 16 hours exposure in ambient atmosphere **Objective: To assess performance in sulphur-rich, humid environments**				
a)	25 x 6mm GI Earth flat	Mts.	50.00		
	Rate in words:				

SL. No.	DESCRIPTION	UNIT	QTY	RATE	AMOUNT
b)	Busbar of 0.5 Mtr length made out of 25 x 10 mm GI strip with drill holes of M8 at 25mm interval mounted on insulators with MS powder coated Enclosure & view panel.	Nos.	1.00		
	Rate in words:				
c)	1 Core x 6Sq. mm including Terminations for DB Door earthing & DB third pin earthing.	Mts.	200.00		
	Rate in words:				
d)	Providing of maintenance free copper coated Earth rod of 3 Mtr length 25 mm dia. earth rod with necessary coupler and connector, universal clamps, inspection chamber, earth conductivity enhancing mineral compound of required quantity around the electrode in the excavated pit and providing earth chamber including necessary civil works also necessary holes, materials to interconnect with earth strips complete as required as per IEC 60364and IS 3043 with latest amendments.	Nos.	2.00		
	Rate in words:				
14	Supply and fixing of 1.1 KV grade nominal 2.0 mm +/- 10% thick insulated Synthetic Mat conforming to IS 15652: 2006 and meeting the requirements of IS 5216 (Part1,2&3), IS 8437, IEC-479 Pub-1, along-with suitable adhesive/ chemibound, Pu resin, waterproofing compound and sealing material as per in service recommendation - 2mtrx1mtr.	Nos.	2.00		
	Rate in words:				
15	Supply & fixing of best quality shock treatment charts written in Hindi, English and Kannada framed laminated boards as required & as directed by EIC.	Nos.	1.00		
	Rate in words:				
16	Supply of First Aid Kit Box made of CRCA sheet steel, painted with standard red colour and all standards first aid materials required for substation complete as required.	Nos.	1.00		
	Rate in words:				

SL. No.	DESCRIPTION	UNIT	QTY	RATE	AMOUNT
17	Supply, fabrication & installation of Danger boards made of 2.0mm thick aluminium sheet of 300mm x 300mm, the content of the board will be in two languages viz. English and Kannada. Standards safety boards and letters are of computer cutting fluorescent stickers required and directed by EIC.	Nos.	1.00		
	Rate in words:				
18	Supply of Rubber hand gloves for line man grade electrically tested type 2 working voltage 1,100V test potential 10000V RMS, minimum breakdown voltage 12kV and conforming to IS: 4770/1991 complete as required.	Nos.	1.00		
	Rate in words:				
19	Supply and fixing of LAMINATED Single line diagram chart duly framed with 5mm thick glass suitable to mount on wall. Respective panels in the room shall be highlighted.	Nos.	1.00		
	Rate in words:				
20	150mm wide x 125mm depth suitable for 7 Segment DBs 14G DB cabinet M S Mat finish Powder coated for Camouflaging DBs with Copper & GI busbars with insulators & Acralyic view panel including supply & installation.	Rmtr	10.00		
	Rate in words:				
21	Supply, installation, testing & commissioning of 2 hour fire rated fire retardant material foam type sealing all electrical cutouts/ducts and openings made in the slab / wall / partition to take conduits / cable trays / raceways etc as required complete / as directed by the site incharge.	Sqmt	2.00		
	Rate in words:				
22	Supply of following Batten type LED light fittings with powder coated CRCA sheet steel housing with 4 feet LED tube light with integrated constant current driver, extruded aluminium heat sink, High efficiency SMD LED, system efficacy > 95 lum/W, cool day light, CCT of > 5000K, driver tested as per IS: 15885 Part - 2/Sec 13, efficiency of > 90%, PF > 0.95, THD < 10%, suitable for working on 230V, 50Hz, 1Ø AC supply				

SL. No.	DESCRIPTION	UNIT	QTY	RATE	AMOUNT
	1 x 4' x 20W, LED luminary with inbuilt lamps suitable for wall/pendant mounting arrangements.	Nos.	59.00		
	Rate in words:				
23	Supply of following Surface/recessed mounting type LED light fittings with integrated constant current driver tested as per IS: 15885 Part - 2/ Sec 13, glare free, High efficiency LED, cool day light, CCT of >5000K, system efficacy>100lum/W, PF>0.95, THD<10% . The LED light fittings shall be suitable for working on 230V, 50Hz, 1Ø AC supply.				
a)	18W surface mounted round type	Nos.	26.00		
	Rate in words:				
b)	18W Wall mounted round type	Nos.	10.00		
	Rate in words:				
24	Supply of 1200mm sweep super-efficient BLDC ceiling fans model super X1 type with remote with the rated voltage 160V- 265V, frequency 48-52Hz. Input Power: 30-35 Watts, Min air delivery 230 m3/min, speed 385 RPM, with 3 leafs, 6 key remote, On/Off, 5 speeds completely pre wired up to terminal block complete as required.	Nos.	32.00		
	Rate in words:				
25	Supply of light duty exhaust fans of 300 mm sweep sweep with polycarbonate/FRP body suitable for operation on 230V, 50Hz, Single phase, AC supply complete with 3core flexible copper conductor cable, built in grill and mounting arrangement.	Nos.	5.00		
	Rate in words:				
	Total Part C				

Name of Work: HI RES LAB - Conversion of Boat shed area into lab area at RRI Campus, Bengaluru

SCHEDULE OF QUANTITIES

SL. No.	DESCRIPTION	UNIT	QTY	RATE	AMOUNT
	PART D - UPS				
1	Design, manufacture, assembly, supply, installation, testing, delivery and commissioning of 3KVA MONOLITHIC UPS, online, double conversion operating type 1 ph input and 1 ph output, 3 Wire UPS system with IGBT rectifier, 3 level inverter, transformer less high efficiency type as per technical specifications. The UPS Module Cabinet shall consist of a Breaker & breaker cabinet, static/manual bypass switches, rectifier / charger, a three-phase inverter, logic, synchronizing equipment, protective devices and accessories as per SLD & display module shall show clear graphical / text based overview of alarms, status data & instructional help, Top/Bottom cable entry provision, with necessary BMS compatibility (Hardware & software items for third party integration) with MODBUS protocol-RS 485 and accessories as required for proper operation.The UPS system is selected with PRS kit. The UPS should have SNMP card for IBMS integration. **Warranty should be 5 years with 6 preventive maintenance visits each year during warranty period.**	Sets	1.00		
	Rate in words:				
2	Supply, Installation, Testing and commissiong battery bank for item no 1 UPS **3kVA** load. The battery should be of **Conventional SMF** VRLA, 12V, FR container type, with end cell voltage of 1.7V of approved makes to give **90 minutes backup at full kW load** at Unity load power factor. The rate should include DC MCCB, mP based with necessary spreders,shrouds & extended copper bus link, interlinks & hard wares suitable to terminate copper flexible cable. (Dual string). **Warranty should be 2 years and have an useful service life of 5 years and 2 preventive maintenance visits each year during warranty period**. Battery sizing calculations with unity power factor with back up to be submitted and approved by consultant.	Sets	1.00		
	Rate in words:				
	Total Part D				

Name of Work: HI RES LAB - Conversion of Boat shed area into lab area at RRI Campus, Bengaluru

Sl. No.	Description	Quoted Amount	Remarks
1	PART – A : Civil Works		
2	PART – B : PH Works		
3	PART – C : Electrical Works		
4	PART-D : UPS		
	Total		
	Add GST @ 18%		
	Grand Total		
Total Amount in Words:			
Number of corrections:			
Number of overwriting's:			
Number of additions:			**Signature of tenderer:**

LIST OF APPROVED MAKES

LIST OF APPROVED MANUFACTURERS / MAKE / BRAND / VENDORS FOR CIVIL

SL. NO.	DESCRIPTION	ADDRESS
1	**Anti-termite treatment**	
		M/s. Pest Control India Pvt. Ltd.,
		M/s. Item Secure Pvt Ltd.,
		M/s. Pest Management & Consultants (India) Pvt. Ltd.,
	CEMENT	
2	**Cement - OPC 43 / 53 Grade**	
		ACC Cement
		Birla Cement
		Ultra Tech Cement
		Ramco Cement
		Dalmia Cement
3	**RMC**	
	Ready Mix Concrete	
		M/s. RMC Readymix (India) Pvt. Ltd.,
		M/s. ACC - RMC
		M/s . Ultra Tech Cement Ltd
	STEEL	
4	**Tor steel (Rolled)/TMT STEEL / Structural Steel**	M/s. Jindal Vijaynagar Steels Ltd.,
	Fe 500 / Fe 550	
		M/s. TISCO
		M/s. Rashtriya Ispat Nigam Ltd., (VIZAG)
		M/s. Steel Authority of India Ltd., (SAIL)
5	**CEMENT CONCRETE BLOCKS**	
		M/s. Basnth Betons
		M/s.Sobha Concrete Products
		M/s Apco
		M/s AVS
6	**ENGINEERED BLOCKS (LIGHT WEIGHT / AAC BLOCKS)**	
		M/s. Nucon
		M/s. Axon
		M/s. Fushion

SL. NO.	DESCRIPTION	ADDRESS
		M/s. Meghalite
	PAINTS	
7	**Oil Bound Distemper/ Acrylic Emulsion**	
	Synthetic Enamel / Cement Paints / Polish .	M/s. Asian Paints (India) Limited,
		M/s. Goodlass Nerolac Paints Ltd.,
		M/s. Godavari Paints
		M/s. Berger Paints India Ltd.,
		M/s Nippon paints
		M/s. Nerolac
		M/s. Snowcem India Limited
		M/s. Surfa Coats Ltd.,
	TEXTURE PAINT	
8	**Texture Finish**	M/s. Asian Paints (India) Limited,
		M/s SKK India Ltd
		M/s. Jotun paints
		M/s. Damani Dye-Chem Pvt Ltd.,
		M/s. Embassy Marketing
		M/s Dryvit paints
		M/s. Godavari Paints
9	**Fire retardant paints**	
		M/s Jotun
		M/s.Promat
		M/s.Hampel
		M/s. Navair International Ltd., (Viper)
10	**Fiber mesh (Recron 3S)**	M/s. Reliance Industries Ltd. (Recron3S)
		M/s Beekart

SL. NO.	DESCRIPTION	ADDRESS
11	**Micro silica**	
		M/s. FOSROC Chemicals (India) Ltd.,
		Dr. Beck +Co., (India) Ltd.,
		M/s. Orkla India Pvt Ltd., (Elkem Brand)
12	**Construction Chemicals**	
	Integral waterproofing compounds	M/s. FOSROC Chemicals (India) Ltd.,
	Water proofing	M/s. SIKA
	Shrinkage / expansion joint filler	M/s. MASTER BUILDER / BASF construction chemicals (India) Pvt Ltd.,
	Epoxy treatment	M/s ARDEX ENDURA (INDIA) Pvt Ltd
		M/s.Pidilite Industries Limited
		M/s. MYK
13	**Plaster mesh**	
		M/s. Arpitha Exports
		M/s. Maruthi Wire Netting
14	**PVC cover blocks / Corner Beads**	
		M/s. Arpitha Exports
		M/s. Ishita Enterprises
		M/s. Millennium Building Systems Inc.,
15	**Ceramic tiles / Glazed tiles**	
	Vitrified tiles	M/s. Bell Ceramics Limited.
		M/s. NITCO
		M/s. H & R Johnson (India) Ltd.,
		M/s. Somany
		M/s. Kajaria Ceramics Ltd.,
		Ms. RAK
		M/s. AGL
		M/s. Varmora
		M/s. Euro Ceramics Pvt Ltd.,
16	**Entrance Gates / Rolling Shutters / Hi speed Doors / Dock Leveller / Dock Shelters**	M/s .Shakti Hormann
		M/s. Gandhi entrance Automations Pvt Ltd,.

SL. NO.	DESCRIPTION	ADDRESS
		M/s. Ambitrends Pvt Ltd.,
		M/s. Avians
		M/s. Concord
17	**Boom Barrier / Turn Stiles**	FAAC
		YSR Security Systems
		Ganga Automation
		Motwane
		Boon Edam
18	**Steel Doors**	M/s .Shakti Hormann
		M/s. IHMS
		M/s. Bangalore Pro Tech.
		M/s. Tata Steel Doors
19	**Concrete Interlock pavers / Cubical pavers**	
		M/s. Basant Beton
		M/s. Designer Pavings and Tiles Pvt. Ltd.
		M/s. Sobha Developers Ltd, (Concrete Products Div.)
20	**PVC Pipes**	
		M/s. Supreme Industries Ltd.,
		M/s. Prince System
		M/s. Finolex Industries Ltd.,
21	**HDPE sub soil drainage pipe**	R sum technologies Pvt Ltd,
22	**Galvalume Roofing Sheet / Precoated Steel Sheet**	
		M/s. Lloyd Insulations (India) Ltd., Ltd.,
		M/s . Four Star
		M/s. Karthik Rofing
		M/s. Tata Blue Scope
23	**Rain water pipes**	
		M/s. The Supreme Industries Ltd.,
		M/s. Finolex Industries Ltd.,

SL. NO.	DESCRIPTION	ADDRESS
24	**Perlite concrete and waterproofing**	
		M/s. Chowgule Industries Ltd
		M/s. Ultra Tech
25	**Decking sheets**	M/s. Millennium Building Systems Inc.,
		M/s.Tata BlueScope Building Products
26	**Khurra**	
		M/s. Hydromatic Engineering Company (Neer)
27	**KOTA /GRANITE FLOORING**	M/s Kohinoor Granite and Marbles (Bangalore) ,Mr Sanjay 09482581156 / info@kohinoorgranite.net
		M/s RPG Granites (Bangalore) ,MrPavan 098450-44111 / 09845091116
		M/s. Fateh Stones
28	**Heat reflective paint / Heat resistant tile**	M/s SHUBAM TECHNO BUILD (INDIA) PVT. LTD (Thermatek)
		M/s Dr. Fixit / M/s Pidilite Industries Limited
		M/s EXCEL COATINGS
29	**Expansion Joint**	C S Group
		Kantaflex
		Migua
		Vexcolt
		Genotek
30	**INDUSTRIAL FLOORING**	M/s. Master Build
		M/s. Fosroc
		M/s. SIKA
		M/s. TREMCO CPG
		M/s CIPY
		M/s MYK

LIST OF APPROVED MAKES FOR CIVIL		
SL / NO	**PARTICULARS**	**APPROVED MAKES**
	Double glazing units	Approved equivalent
	6+12+6 - DGU	
	PATCH FITTINGS / All GLASS DOOR	
	Floor springs, lock, hinges,	Dorma, Epco, Sevax Kinlong
	Top hung system etc.,	or approved equivalent.
	HANDLES	
	Handles	Dorma, Epco, Sevax, Kinlong
		or approved equivalent.
	LOUVERS	
	Aluminium louvers	Hunter douglas/ Jindal / Bhoruka
		or approved equivalent
	TOP HUNG OPENABLE PANEL	
	4 / 2 point locking arrangements	Alualpha, Giesse, Securistyle ,
		Kinlong or approved equivalent
	STRUCTURAL STEEL	SAIL / TATA / JINDAL / ISPAT / BHUVALKA
	Fabricators	Contractor to propose
	SPIDER FITTING	
	SS 316 Grade Spider	DLCO, KINLONG, BSW
		or approved equivalent.
	ROCK WOOL INSULATION	KIMMCO / TWIGA
		or approved equivalent.
	FROST FILM	3M or approved equivalent
	DOOR CLOSER	Dorma , Haffele
		or approved equivalent
	SLIDING DOOR HARDWARES	Kinlong , Dorma / Manusha
		or approved equivalent
	DRY CLADDING	FUNDERMAX / ACP /
		or approved equivalent
	ALUMINIUM EXTRUSIONS	HINDALCO / JINDAL / BHORUKA
		/ SAPA or approved equivalent
	FIRE & SMOKE SEALANT	Promat / Hilti or approved equivalent

LIST OF APPROVED MAKES FOR PHE

SL. NO.	ITEM DESCRIPTION	MAKE
1	SANITARY WARE:	JAGUAR/HINDWARE/PARRYWARE
2	CP FITTINGS,ACCESSORIES:	JAGUAR/HINDWARE/PARRYWARE
3	CPVC PIPES	ASTRAL PRO / ASHIRWAD
4	CPVC FITTINGS	ASTRAL PRO / ASHIRWAD
5	BALL VALVE	ZOLOTO/ LEADER/EQUIVALENT
6	ANCHOR FASTNER / 'U' CLAMPS	HITECH SUPPORTS/
7	PVC PIPES (SWR Quality)	ASTRAL PRO / ASHIRWAD
8	PVC PIPES (Agricultaural series)	ASTRAL PRO / ASHIRWAD
9	PVC FITTINGS (Fabricated)	CLARION / SRI VINAYAKA
10	PVC FITTINGS (Moulded)	PRINCE / SUPEREME /ASTRAL PRO
11	PVC FLOOR TRAPS & P-TRAPS (Moulded)	PRINCE / SUPEREME /ASTRAL PRO
12	MS BRACKETS	VS/DRP
13	SS GRATING FOR FLOOR TRAP	CHILLY CAMRY/JAYNA

	LIST OF APPROVED MAKES FOR ELECTRICAL & UPS	
SL NO	**DESCRIPTIONS**	**MAKES**
1	MCCB	LEGRAND (DPX3) / SIEMENS 3VJ2 SERIES / HAGER - H3+
2	MCB/ELCB/RCCB/RCBO/MPCB	LEGRAND - DX3 / SIEMENS 5TJ SERIES / HAGER - H3
3	SPD	ASCO / ZOTUP
4	EARTH LEAKAGE RELAY WITH CBCT	TRINITY / ELMEASURE/OEM APPROVED
5	INDICATING METERS - DIGITAL	INVENDIS / TRINITY / SCHNIDER /OEM APPROVED
6	MULTI FUNCTION METER WITH RS-485 PORT (V,A,HZ,PF,KVA,KW,KWH,KVAR, V&I THD, HARMONICS)	TRINITY EXPERT PRO / INVENDIS - INV 4640 / TITAN 311/OEM APPROVED
7	DUAL KWH METERS WITH RS-485	INVENDIS / TRINITY/OEM APPROVED
8	CURRENT TRANSFORMER	KALPA /AMPTURN / NEWTEK/OEM APPROVED
9	POTENTIAL TRANSFORMER	KALPA /AMPTURN / NEWTEK/OEM APPROVED
10	INSTRUMENT TRANSFORMER	KALPA /AMPTURN / NEWTEK/OEM APPROVED
11	ALUMINIUM BUS BAR	HINDALCO / JINDAL/OEM APPROVED
12	PUSH BUTTON	SIEMENS / TECHNIK/ L&T/OEM APPROVED
13	SELECTOR SWITCHES	L&T / KAYCEE /OEM APPROVED
14	PANEL ACCESSORIES & TERMINAL BLOCKS	DIRAK / ELMAX / PHOENIX / WAGO/OEM APPROVED
15	LED INDICATING LAMPS	SIEMENS / TECHNIK/ L&T / ELMEASURE/OEM APPROVED
16	MCB DB	LEGRAND / HAGER / SIEMENS
17	FRLS LT CABLES	APAR / AVOCAB / POWER FLEX / SIECHEM HELLO/POLYCAB/FINOLEX/HAVELLS
18	FRLS LT SINGLE-MULTICORE COPPER CABLES	APAR / AVOCAB / POWER FLEX / SIECHEM HELLO/POLYCAB/FINOLEX/HAVELLS
19	PVC-FRLS INSULATED COPPER WIRES	APAR / AVOCAB / POWER FLEX / SIECHEM HELLO/POLYCAB/FINOLEX/HAVELLS
20	CONTROL CABLES FOR PANELS	APAR / AVOCAB / POWER FLEX / SIECHEM HELLO/POLYCAB/FINOLEX/HAVELLS/OEM APPROVED
21	END TERMINATION MATERIALS	DOWELLS / HMI / COMMET
22	CABLE TRAY	CLASSIC ENGINEERING / LUMENS / CABLE TECH
23	GI & POWDER COATED RACEWAY	CLASSIC ENGINEERING / LUMENS / CABLE TECH
24	MODULAR TYPE SOCKETS & SWITCHES	LEGRAND MYRIUS / HAGER INSYSTA
25	INDUSTRIAL PLUG & SOCKET	LEGRAND / SCAME / MENNEKES
26	FRLS CONDUITS	POWER PLAST / UNIVERSAL
27	MAINTAINANCE FREE EARTHING	ASHLOK / AXIS / INDELEC
28	COPPER PLATE, CI PIPE, GI PIPE, COPPER & GI EARTH STRIPS	AXIS - TERRA / INDELEC
29	UNINYWIN CABLES	IGI / BONTON
30	UPS	APC/ DELTA/ EATON/ FUJI ELECTRIC/ NUMERIC/ PILLER/ RIELLO/ SOCOMEC/ VERTIV

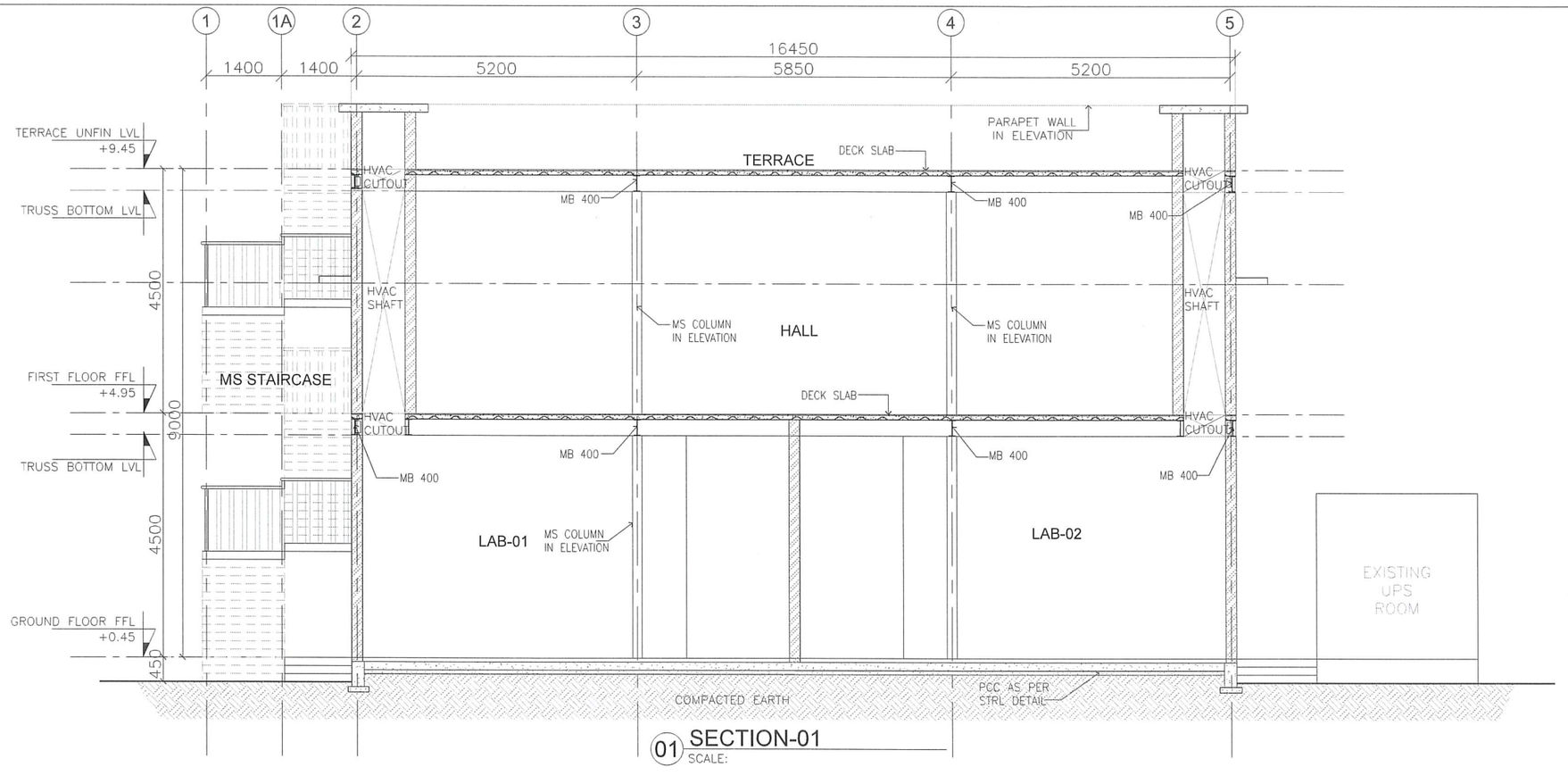

01 SECTION-01
SCALE:

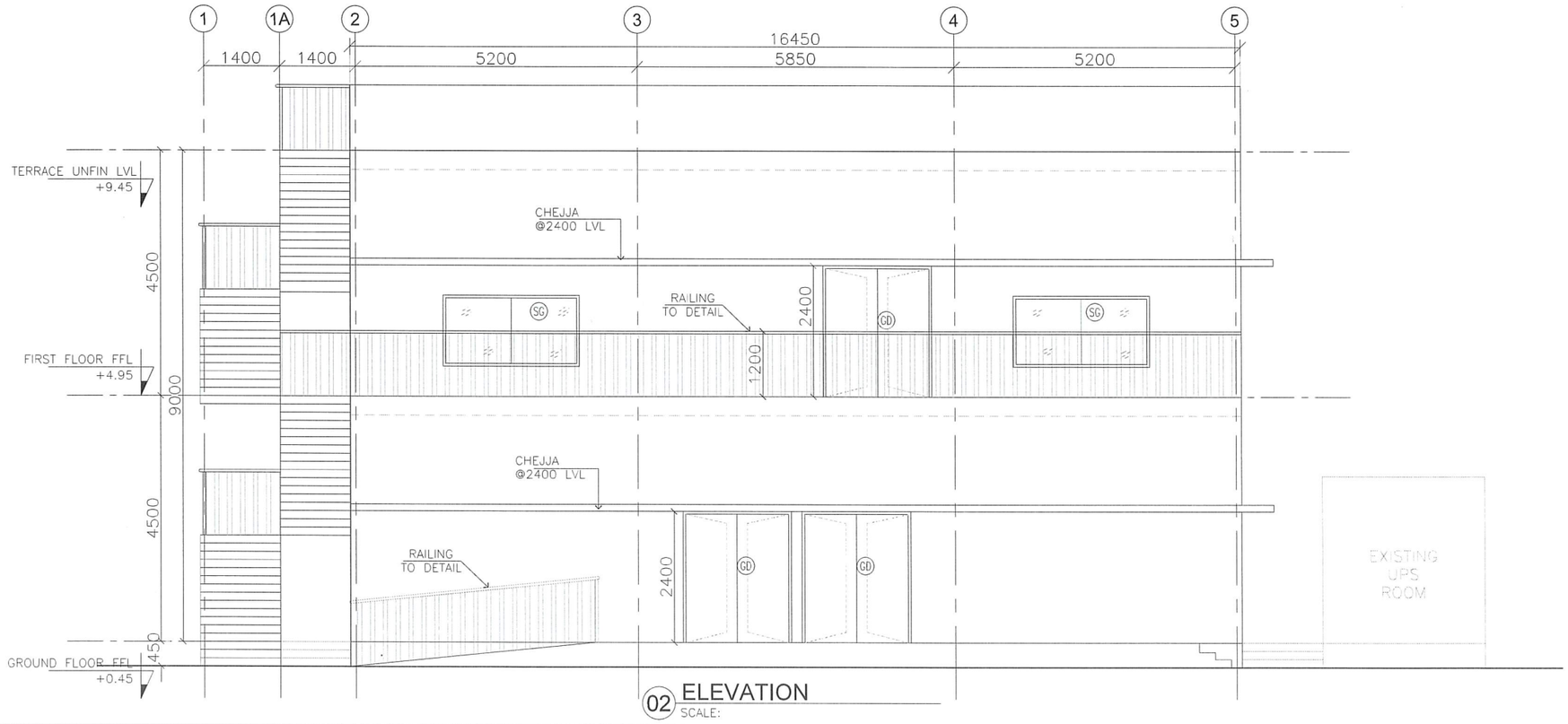

02 ELEVATION
SCALE:

DOOR SCHEDULE			
GD	2000X2400	ENTRANCE	CIVIL
GD3	1100X2400	SERVICES ENTRY	CIVIL
GD4	1000X2400	TOILET CORRIDOR DOOR	CIVIL
SD	1300X2300+100	HVAC SHAFT DOOR	CIVIL
SD1	650X2300+100	ELEC. SHAFT DOOR	CIVIL
D2	900X2400	TOILET ENT.DOOR	CIVIL
D3	650X2400	WC DOOR	CIVIL

SCHEDULE OF OPENINGS FOR WINDOWS					
TYPE	SIZE	SILL	LINTEL	LOCATION	DESCRIPTION
SG	2500X1200	-	2400	REFER PLAN	GLAZING & LOUVERS
SG1	2000X1200	-	2400	REFER PLAN	GLAZING & LOUVERS
SG3	1200X1200(600+600)	-	2400	REFER PLAN	GLASS+LOUVER
V	750X600		2400		VENTILATOR

Raman Research Institute * Bangalore - 560 080 *

REV.NO.	DATE	DESCRIPTION FOR REVISION	DRAWN BY	CHECKED BY
R0	28-09-26	FOR TENDER	RM	KS

PURPOSE:VA

FOR TENDER

OWNER

RAMAN RESEARCH INSTITUTE
BANGALORE

PROJECT

Hi RES-LAB
BANGALORE

TITLE

SECTION -01 AND ELEVATION

NORTH

DEALT	VA-JOB NO		REVISION
KS			R0
SCALE	DATE	DRAWING NO	
1:50	28-09-26	HR-A-3000	

Venkataramanan Associates
10/2, O'Shaughnessy Road, Langford Gardens, Bangalore - 560025 India

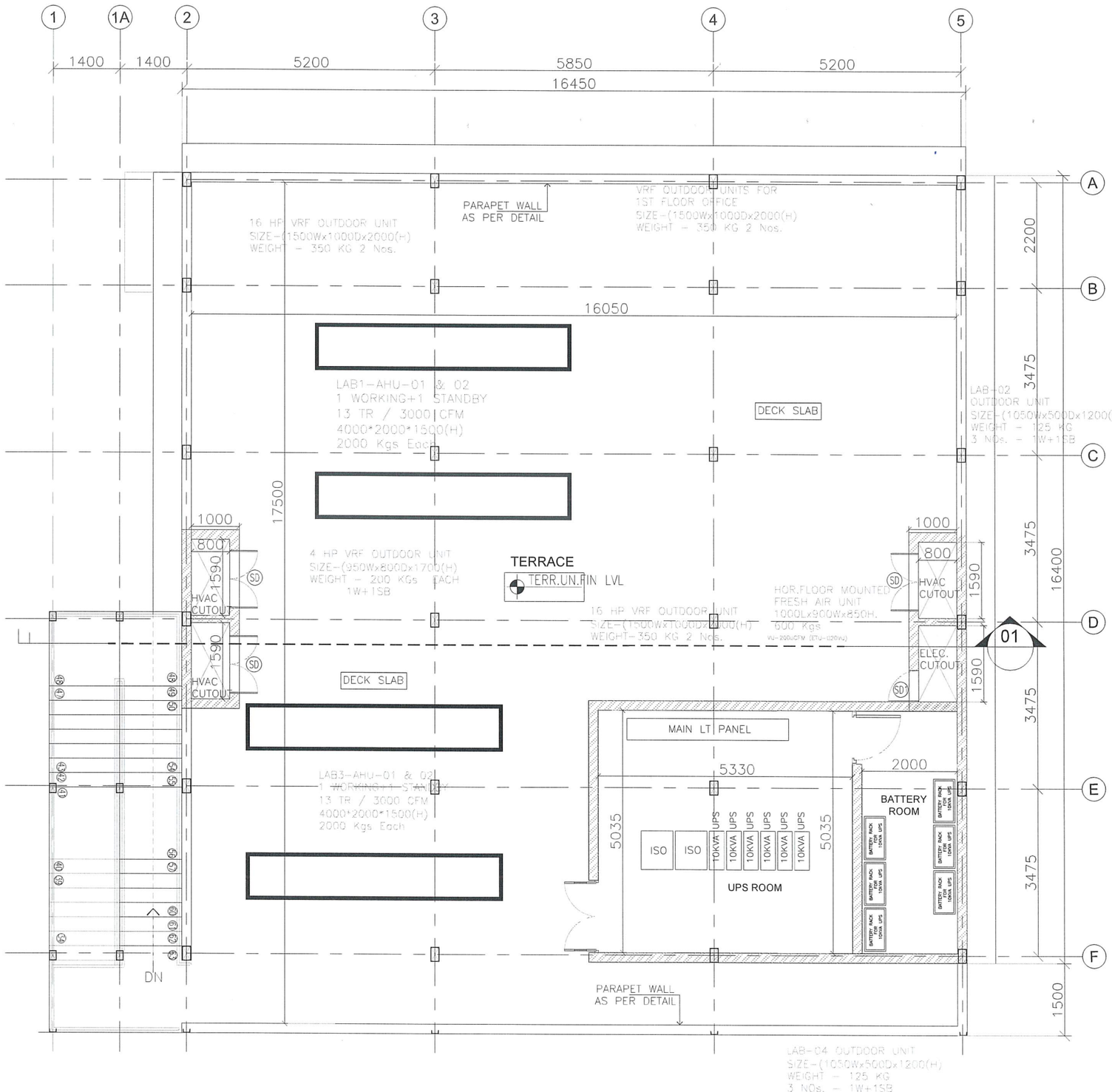

01 TERRACE FLOOR PLAN
SCALE:

DOOR SCHEDULE			
GD	2000X2400	ENTRANCE	CIVIL
GD3	1100X2400	SERVICES ENTRY	CIVIL
GD4	1000X2400	TOILET CORRIDOR DOOR	CIVIL
SD	1300X2300+100	HVAC SHAFT DOOR	CIVIL
SD1	650X2300+100	ELEC. SHAFT DOOR	CIVIL
D2	900X2400	TOILET ENT.DOOR	CIVIL
D3	650X2400	WC DOOR	CIVIL

SCHEDULE OF OPENINGS FOR WINDOWS					
TYPE	SIZE	SILL	LINTEL	LOCATION	DESCRIPTION
SG	2500X1200	-	2400	REFER PLAN	GLAZING & LOUVERS
SG1	2000X1200	-	2400	REFER PLAN	GLAZING & LOUVERS
SG3	1200X1200(600+600)	-	2400	REFER PLAN	GLASS+LOUVER

Raman Research Institute
Bangalore - 560 080

REV.NO.	DATE	DESCRIPTION FOR REVISION	DRAWN BY	CHECKED BY
R0	28-09-2026	FOR TENDER	RM	KS

PURPOSE:VA

FOR TENDER

OWNER

RAMAN RESEARCH INSTITUTE
BANGALORE

PROJECT

Hi RES-LAB
BANGALORE

TITLE

TERRACE FLOOR PLAN

NORTH

DEALT	VA-JOB NO		REVISION
KS			R0
SCALE	DATE	DRAWING NO	
1:75	28-09-26	HR-A-2002	

Venkataramanan Associates
10/2, O'Shaughnessy Road,
Langford Gardens,
Bangalore - 560025 India

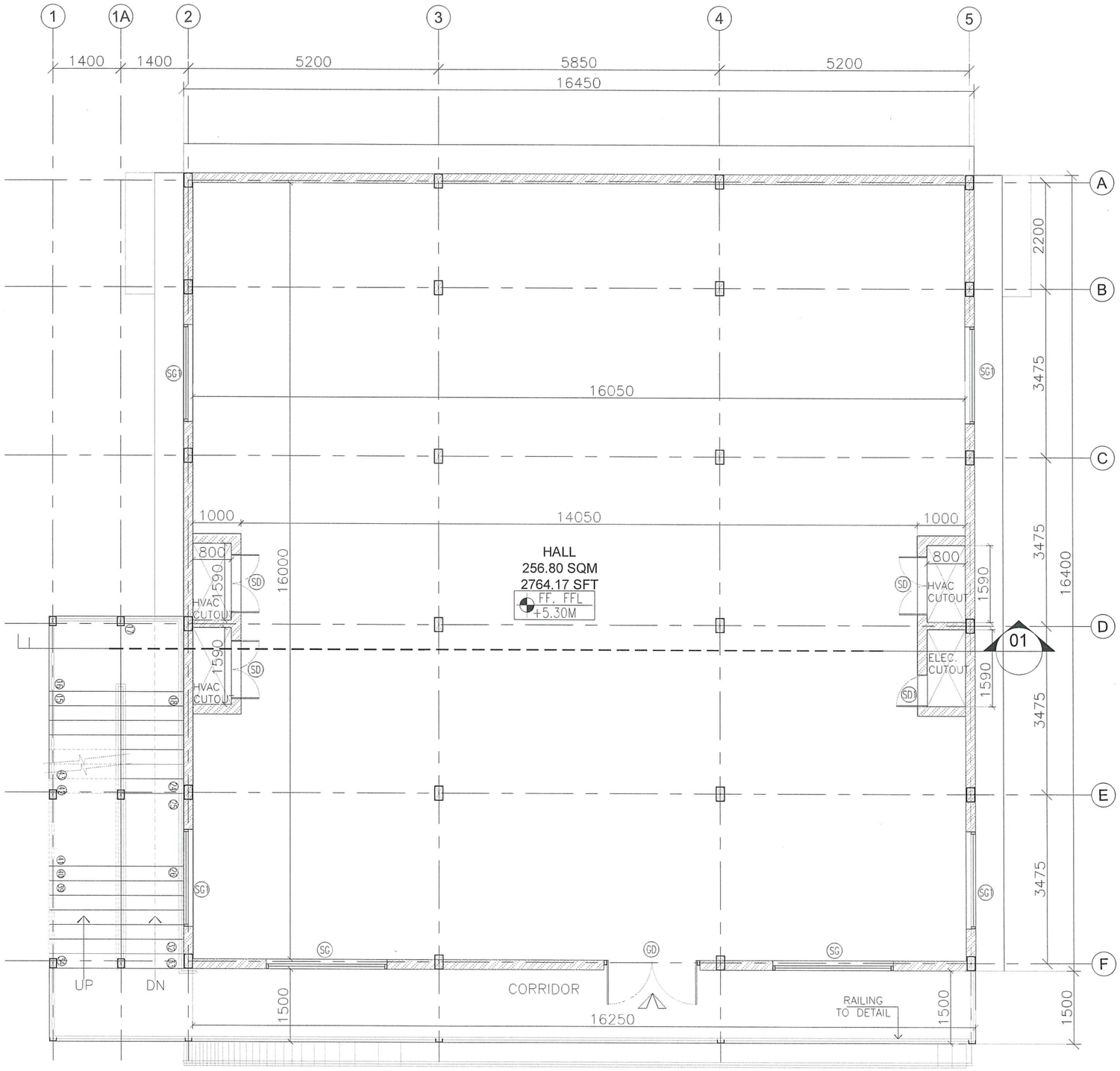

01 FIRST FLOOR PLAN
SCALE:

DOOR SCHEDULE			
GD	2000X2400	ENTRANCE	CIVIL
GD3	1100X2400	SERVICES ENTRY	CIVIL
GD4	1000X2400	TOILET CORRIDOR DOOR	CIVIL
SD	1300X2300+100	HVAC SHAFT DOOR	CIVIL
SD1	650X2300+100	ELEC. SHAFT DOOR	CIVIL
D2	900X2400	TOILET ENT.DOOR	CIVIL
D3	650X2400	WC DOOR	CIVIL

SCHEDULE OF OPENINGS FOR WINDOWS					
TYPE	SIZE	SILL	LINTEL	LOCATION	DESCRIPTION
SG	2500X1200	–	2400	REFER PLAN	GLAZING & LOUVERS
SG1	2000X1200	–	2400	REFER PLAN	GLAZING & LOUVERS
SG3	1200X1200(600+600)	–	2400	REFER PLAN	GLASS+LOUVER

Raman Research Institute ★ Bangalore - 560 080

REV.NO.	DATE	DESCRIPTION FOR REVISION	DRAWN BY	CHECKED BY
R0	28-09-2026	FOR TENDER	RM	KS

PURPOSE:VA

FOR TENDER

OWNER

RRI

RAMAN RESEARCH INSTITUTE
BANGALORE

PROJECT

Hi RES-LAB
BANGALORE

TITLE

FIRST FLOOR PLAN

NORTH

DEALT KS | VA-JOB NO | REVISION R0

SCALE 1:75 | DATE 28-09-26 | DRAWING NO HR-A-2001

Venkataramanan Associates
10/2, O'Shaughnessy Road, Langford Gardens, Bangalore - 560025 India

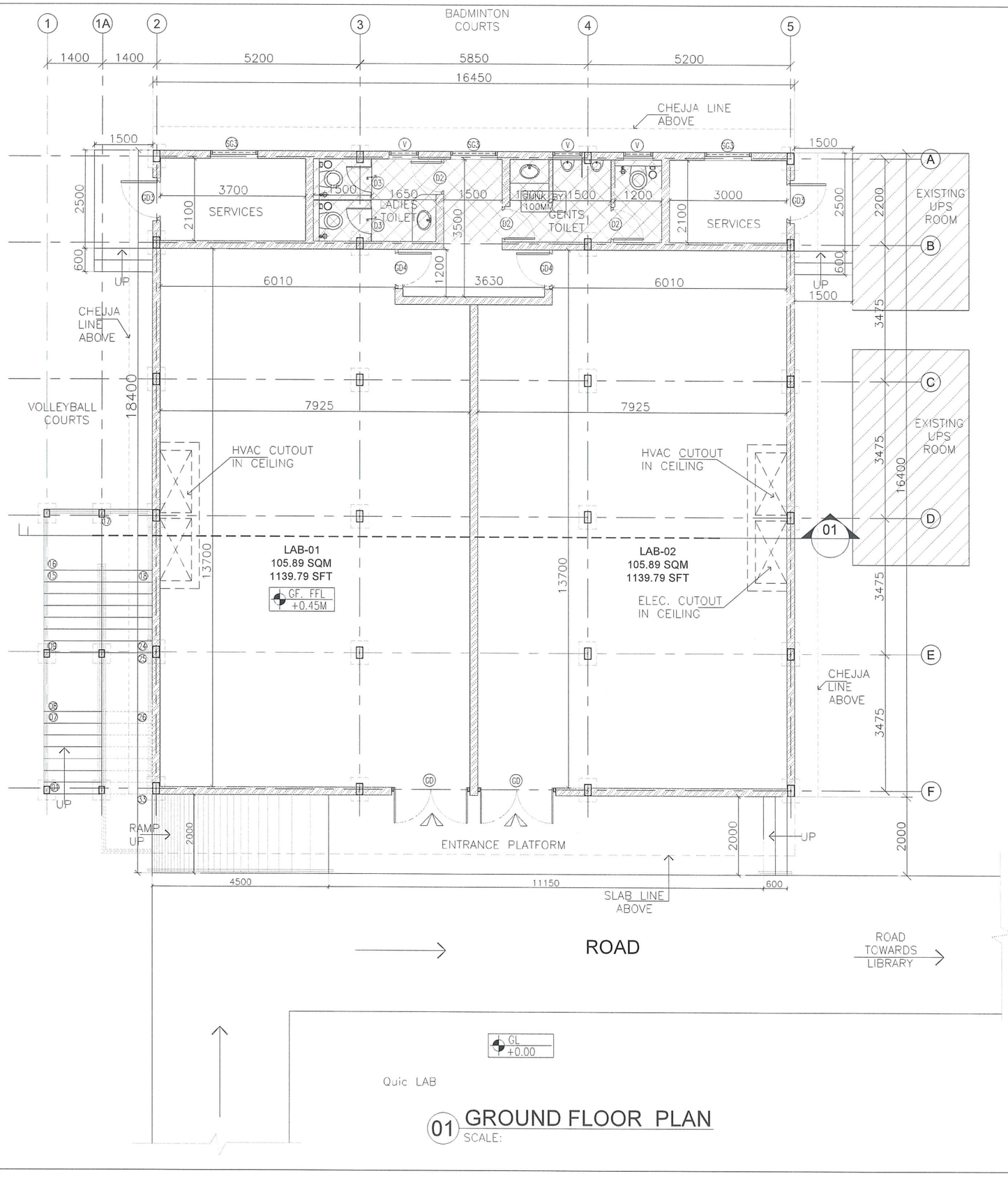

01 GROUND FLOOR PLAN
SCALE:

DOOR SCHEDULE			
GD	2000X2400	ENTRANCE	CIVIL
GD3	1100X2400	SERVICES ENTRY	CIVIL
GD4	1000X2400	TOILET CORRIDOR DOOR	CIVIL
SD	1300X2300+100	HVAC SHAFT DOOR	CIVIL
SD1	650X2300+100	ELEC. SHAFT DOOR	CIVIL
D2	900X2400	TOILET ENT.DOOR	CIVIL
D3	650X2400	WC DOOR	CIVIL

SCHEDULE OF OPENINGS FOR WINDOWS					
TYPE	SIZE	SILL	LINTEL	LOCATION	DESCRIPTION
SG	2500X1200	–	2400	REFER PLAN	GLAZING & LOUVERS
SG1	2000X1200	–	2400	REFER PLAN	GLAZING & LOUVERS
SG3	1200X1200(500+600)	–	2400	REFER PLAN	GLASS+LOUVER

Raman Research Institute
Bangalore - 560 080

REV.NO.	DATE	DESCRIPTION FOR REVISION	DRAWN BY	CHECKED BY
R0	28-09-2026	FOR TENDER	RM	KS

PURPOSE:VA

FOR TENDER

OWNER

RAMAN RESEARCH INSTITUTE
BANGALORE

PROJECT

Hi RES-LAB
BANGALORE

TITLE

GROUND FLOOR PLAN

NORTH

DEALT: KS
VA-JOB NO:
SCALE: 1:75
DATE: 28-09-26
DRAWING NO: HR-A-2000
REVISION: R0

Venkataramanan Associates
10/2, O'Shaughnessy Road, Langford Gardens, Bangalore - 560025 India

FLIGHT–H
TREAD = 300MM RISER = 150MM WIDTH =1500MM NUMBER OF STEPS/FLIGHT= 7 NOS.

FLIGHT–G
TREAD = 300MM RISER = 150MM WIDTH =1500MM NUMBER OF STEPS/FLIGHT= 8 NOS.

FLIGHT–F
TREAD = 300MM RISER = 150MM WIDTH =1500MM NUMBER OF STEPS/FLIGHT= 8 NOS.

FLIGHT–E
TREAD = 300MM RISER = 150MM WIDTH =1500MM NUMBER OF STEPS/FLIGHT= 7 NOS.

FLIGHT–D
TREAD = 300MM RISER = 150MM WIDTH =1500MM NUMBER OF STEPS/FLIGHT= 8 NOS.

FLIGHT–C
TREAD = 300MM RISER = 150MM WIDTH =1500MM NUMBER OF STEPS/FLIGHT= 8 NOS.

FLIGHT–B
TREAD = 300MM RISER = 150MM WIDTH =1500MM NUMBER OF STEPS/FLIGHT= 8 NOS.

FLIGHT–A
TREAD = 300MM RISER = 150MM WIDTH =1500MM NUMBER OF STEPS/FLIGHT= 8 NOS.

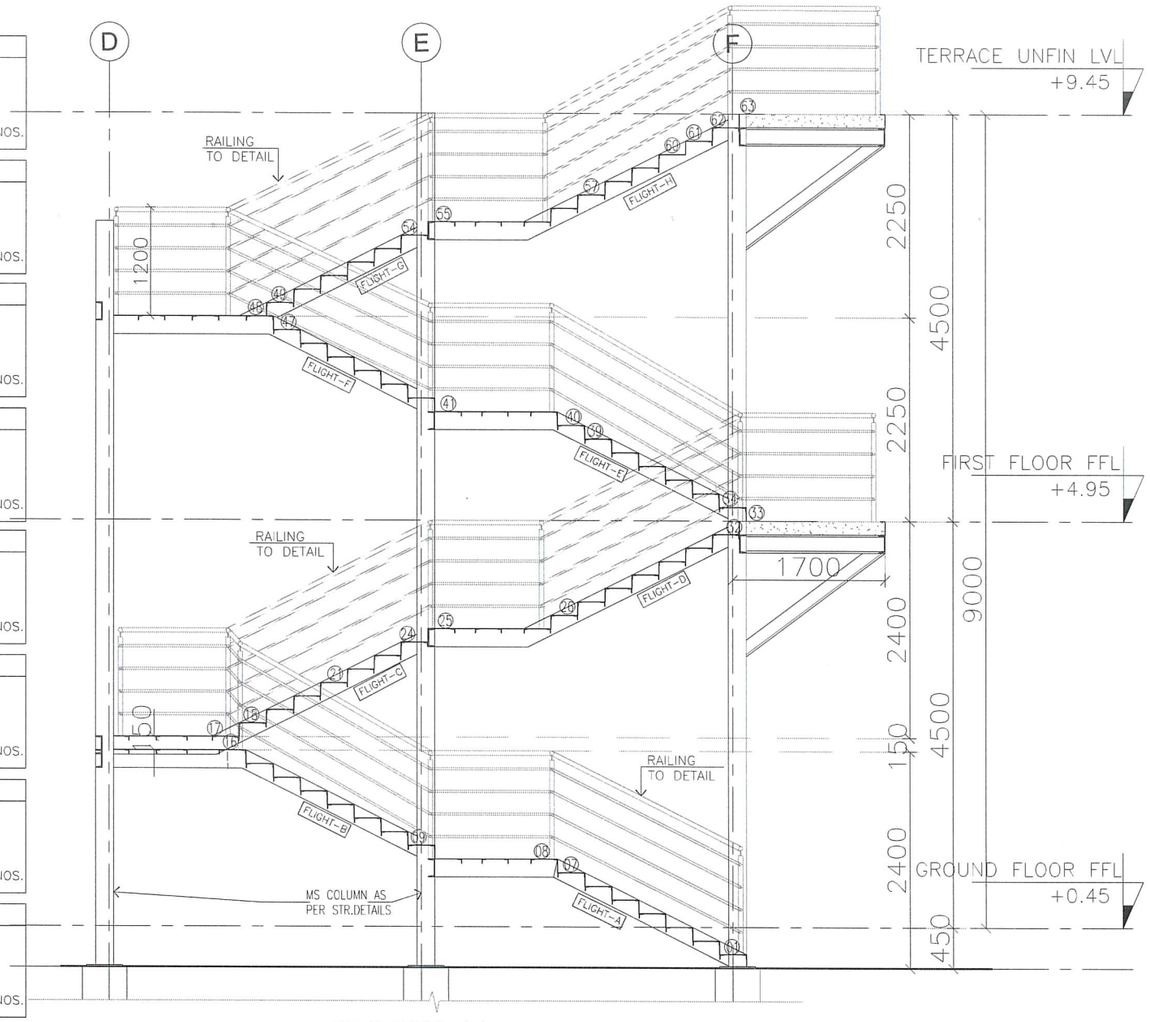

04 SECTION -AA
SCALE:
MS STAIRCASE DETAILS

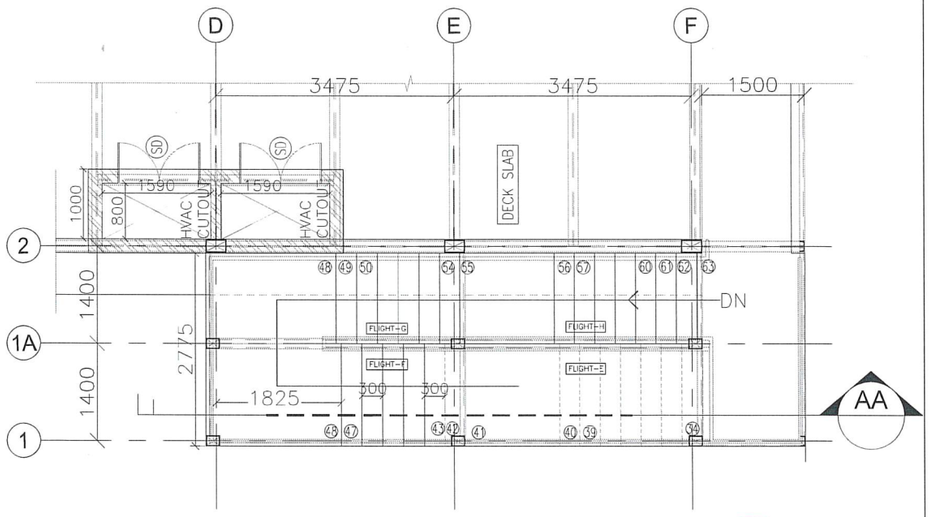

03 TERRACE FLOOR PLAN
SCALE:
MS STAIRCASE DETAILS

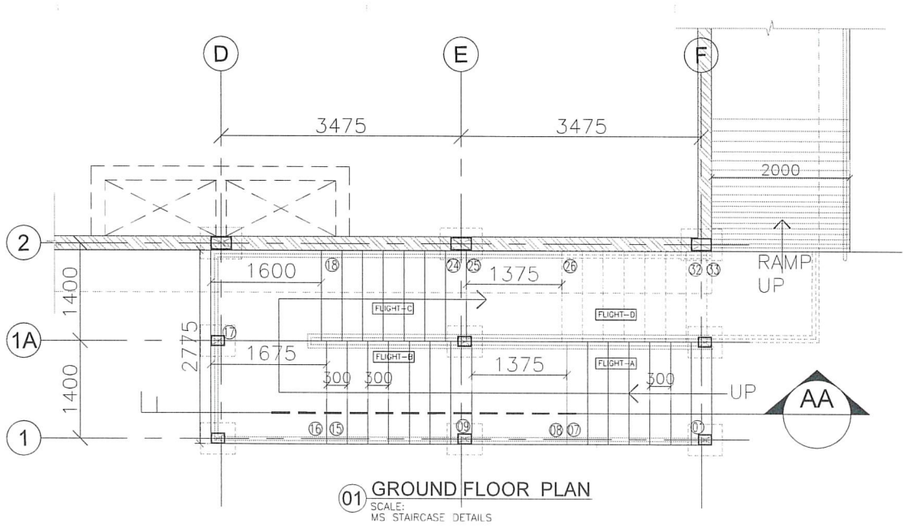

01 GROUND FLOOR PLAN
SCALE:
MS STAIRCASE DETAILS

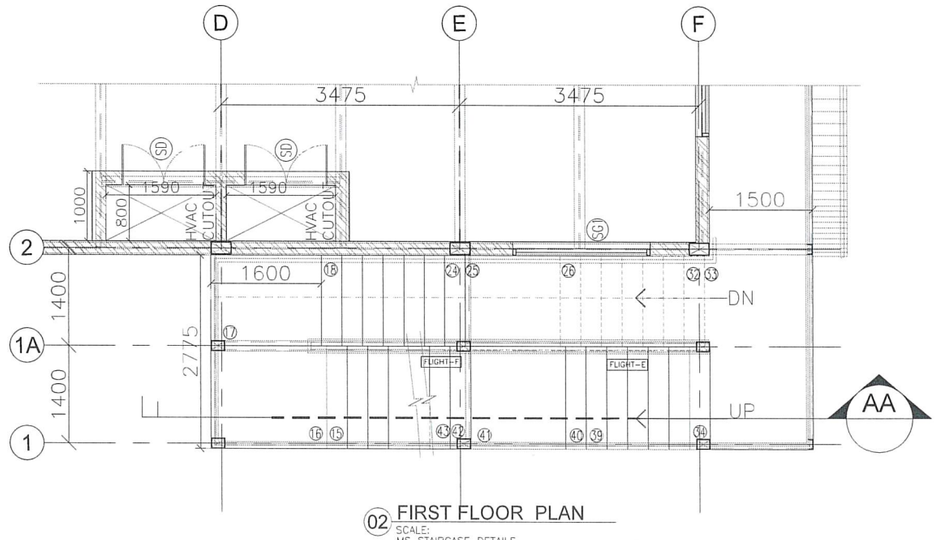

02 FIRST FLOOR PLAN
SCALE:
MS STAIRCASE DETAILS

Raman Research Institute ★ Bangalore - 560 080 ★

REV.NO.	DATE	DESCRIPTION FOR REVISION	DRAWN BY	CHECKED BY
R0	28-09-26	FOR TENDER	RM	KS

PURPOSE:VA

FOR TENDER

OWNER

RAMAN RESEARCH INSTITUTE
BANGALORE

PROJECT

Hi RES-LAB
BANGALORE

TITLE

MS STAIRCASE DETAILS

NORTH

DEALT	VA–JOB NO	REVISION
KS		R0
SCALE	DATE	DRAWING NO
1:50	28-09-26	HR-A-4000

Venkataramanan Associates
10/2, O'Shaughnessy Road, Langford Gardens, Bangalore - 560025 India

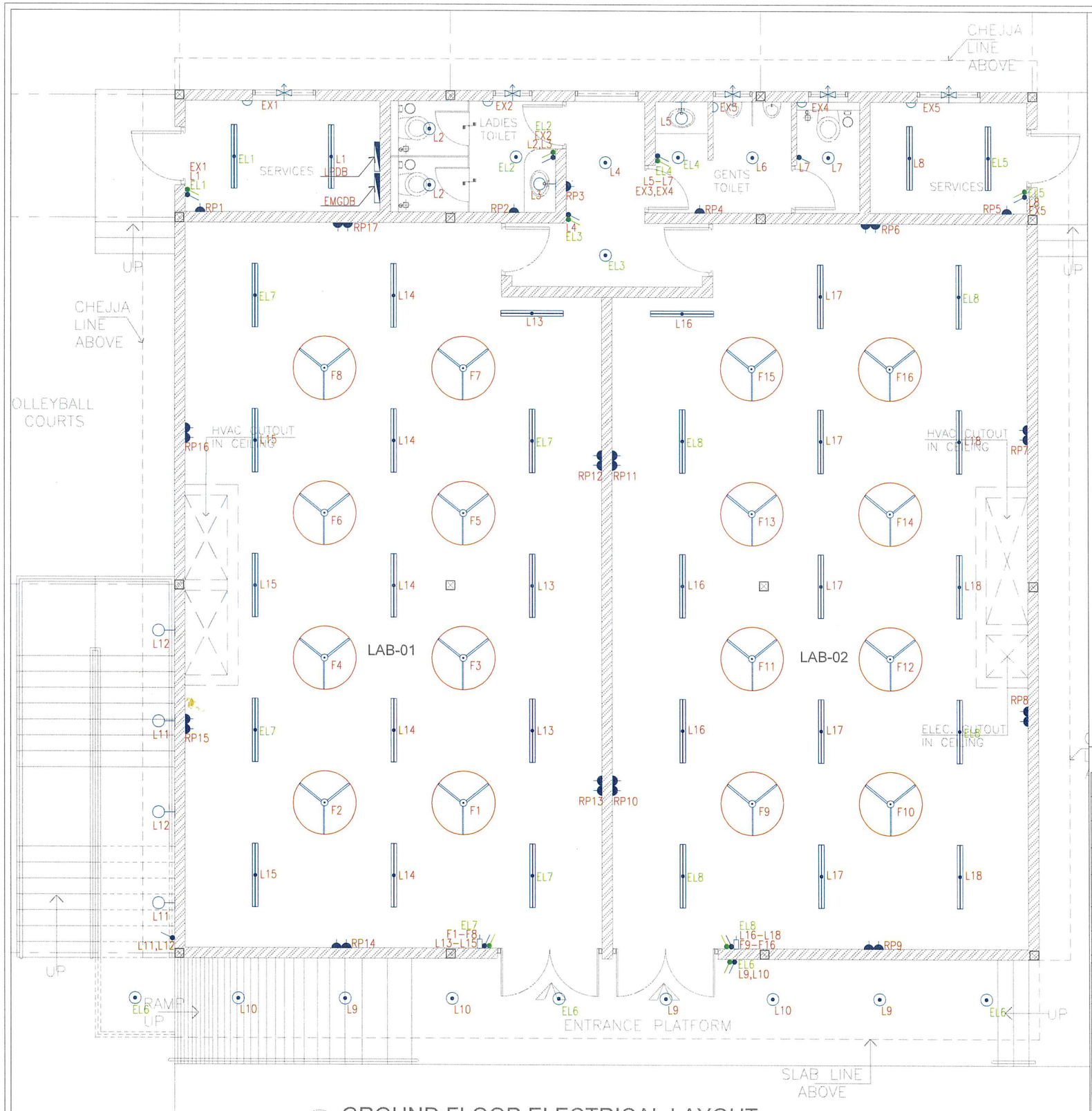

01 GROUND FLOOR ELECTRICAL LAYOUT
SCALE:

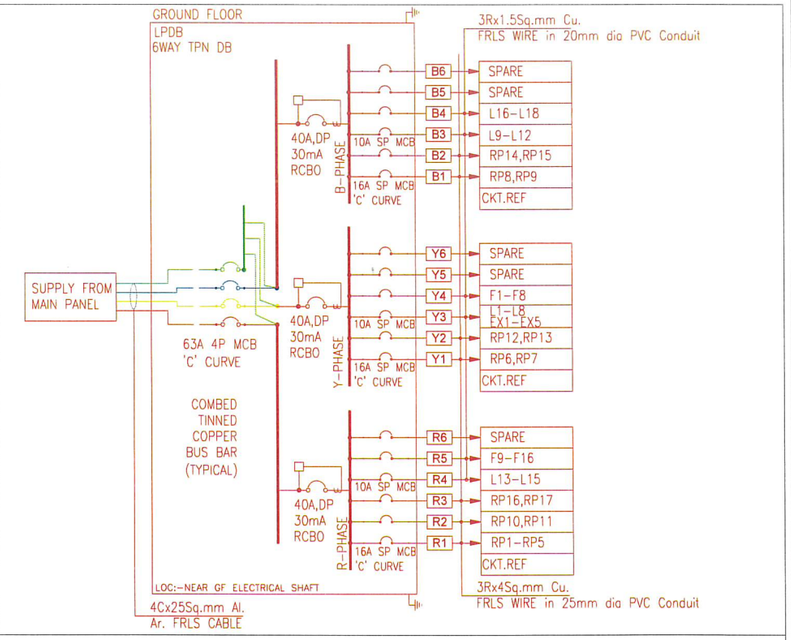

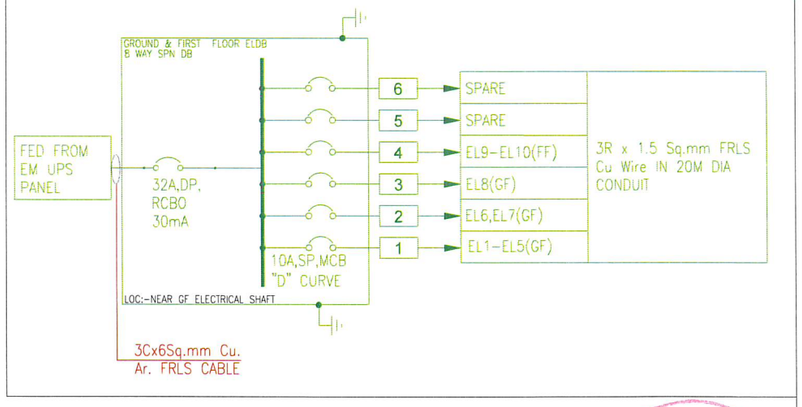

SYMBOL	DESCRIPTION	QTY
	20 WATT 4FT LED BATTEN	59
	20 WATT 4FT LED BATTEN WALL MOUNTED LIGHT FIXTURE	--
	SURFACE MOUNTED LIGHT FIXTURE	26
	WALL MOUNTED LIGHT POINT	10
	5W/METER COVE LIGHT–5700K	00M
	6/16A 5PIN CONTROLLED BY 16A SWITCH WITH BOX	45
	CEILING FAN	32
	6A SINGLE POLE SWITCH	05
	CEILING ROSE	05
	6A SINGLE POLE SWITCH	--
	ELECTRONIC FAN STEP REGULATOR	--
	DISTRIBUTION BOARD	--

REV.NO	DATE	DESCRIPTION OF REVISION	DRAWN BY	CHECKED BY
4				
3				
2				
1				
0	01-10-26	FOR TENDER	LK	DK

PURPOSE.CONSULTANTS: FOR TENDER

PURPOSE.VA

MEP CONSULTANT:

M/s. DK Engineering Associates
129, 4th MAIN ROAD, PAPAREDDY PALYA
NAGHARABHAVI, BANGALORE -72
PHONE 9964142720
Email dileep@dkengassociates.com

OWNER: RAMAN RESEARCH INSTITUTE, BANGALORE

PROJECT: Hi RES-LAB, BANGALORE

TITLE: GROUND FLOOR ELECTRICAL LAYOUT

NORTH

DEALT	VA-JOB NO.	REVISION
LOKESH		R0
SCALE: 1:50	DATE: 01-10-2026	DRAWING NO: HR-E-2001

Venkataramanan Associates
10/2, O'Shaughnessy Road, Langford Gardens, Bangalore - 560025 India

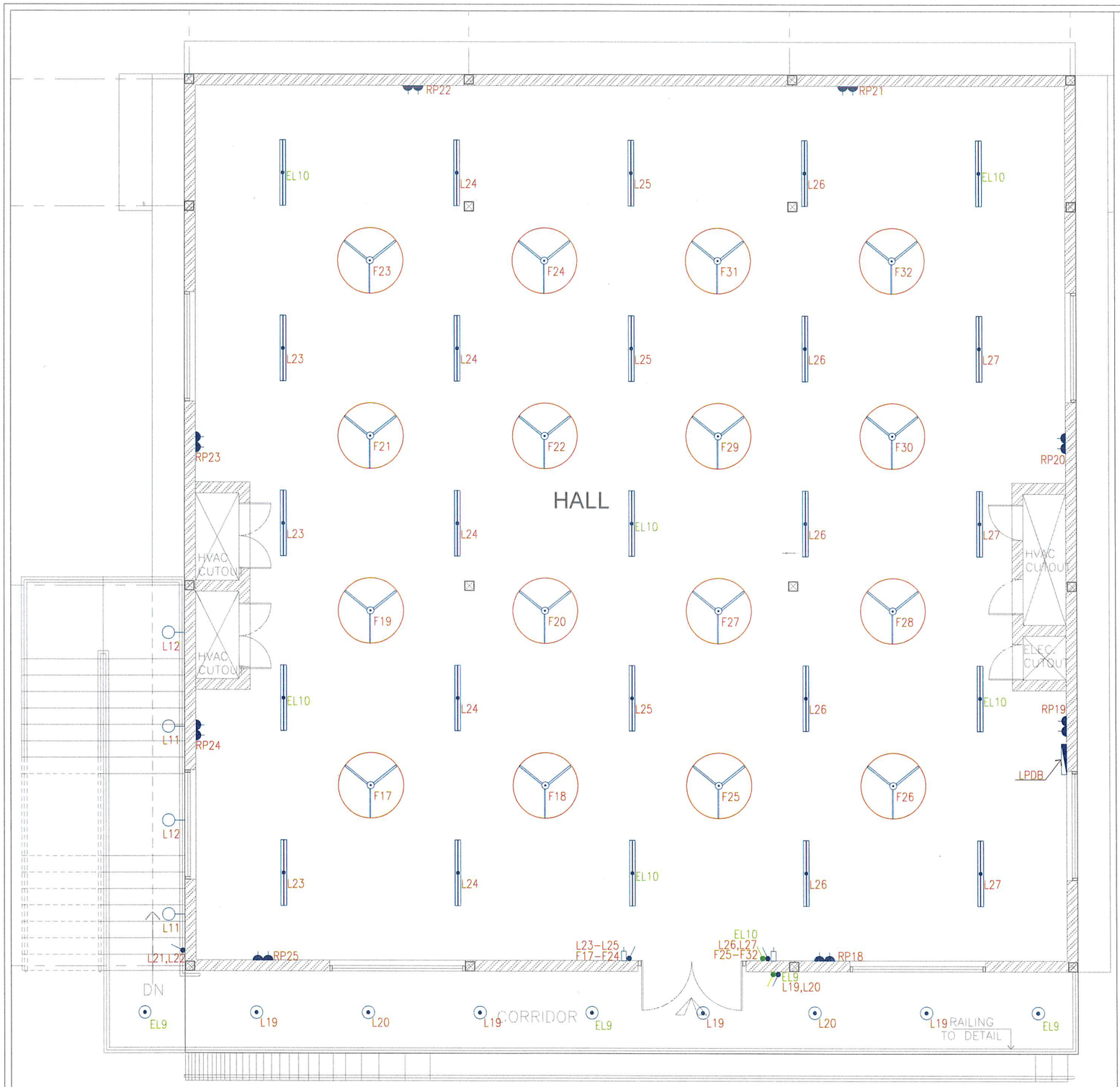

02 FIRST FLOOR ELECTRICAL LAYOUT

SCALE:

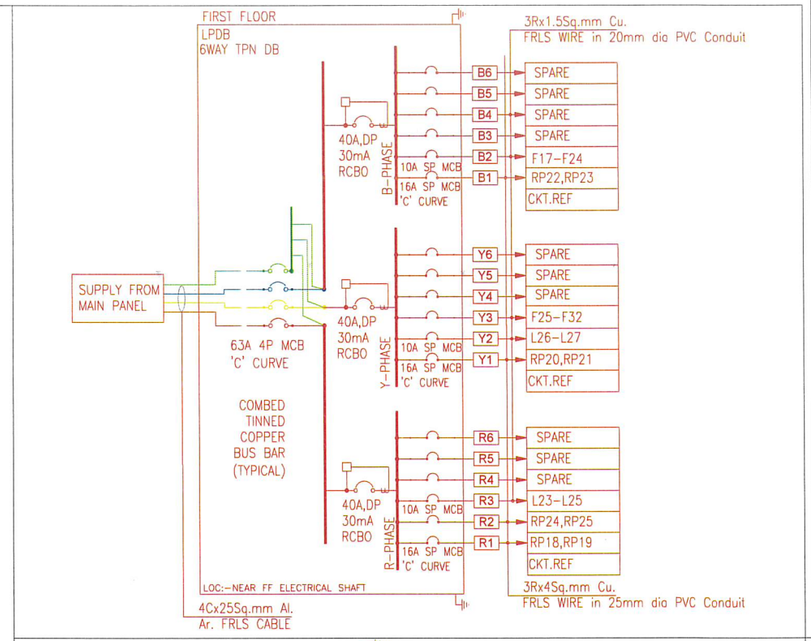

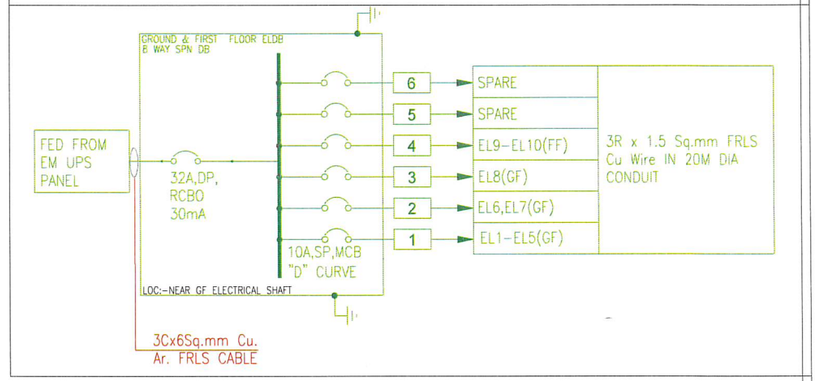

SYMBOL	DESCRIPTION	QTY
	20 WATT 4FT LED BATTEN	59
	20 WATT 4FT LED BATTEN WALL MOUNTED LIGHT FIXTURE	--
	SURFACE MOUNTED LIGHT FIXTURE	26
	WALL MOUNTED LIGHT POINT	10
	5W/METER COVE LIGHT-5700K	00M
	6/16A 5PIN CONTROLLED BY 16A SWITCH WITH BOX	45
	CEILING FAN	32
	6A SINGLE POLE SWITCH	05
	CEILING ROSE	05
	6A SINGLE POLE SWITCH	--
	ELECTRONIC FAN STEP REGULATOR	--
	DISTRIBUTION BOARD	--

REV.NO.	DATE	DESCRIPTION FOR REVISION	DRAWN BY	CHECKED BY
0	01-10-26	FOR TENDER		

PURPOSE:CONSULTANTS

FOR TENDER

Raman Research Institute Bangalore - 560 080

MEP CONSULTANT:

M/s. DK Engineering Associates
129, 4th MAIN ROAD, PAPAREDDY PALYA
NAGHARABHAVI, BANGALORE -72
PHONE 9964142720
Email: dileep@dkengassociates.com

OWNER

RAMAN RESEARCH INSTITUTE
BANGALORE

PROJECT

Hi RES-LAB
BANGALORE

TITLE: FIRST FLOOR ELECTRICAL LAYOUT

NORTH

DEALT	VA-JOB NO	REVISION
LOKESH		R0

SCALE	DATE	DRAWING NO
1:50	01-10-2026	HR-E-2002

Venkataramanan Associates
10/2, O'Shaughnessy Road, Langford Gardens, Bangalore - 560025 India

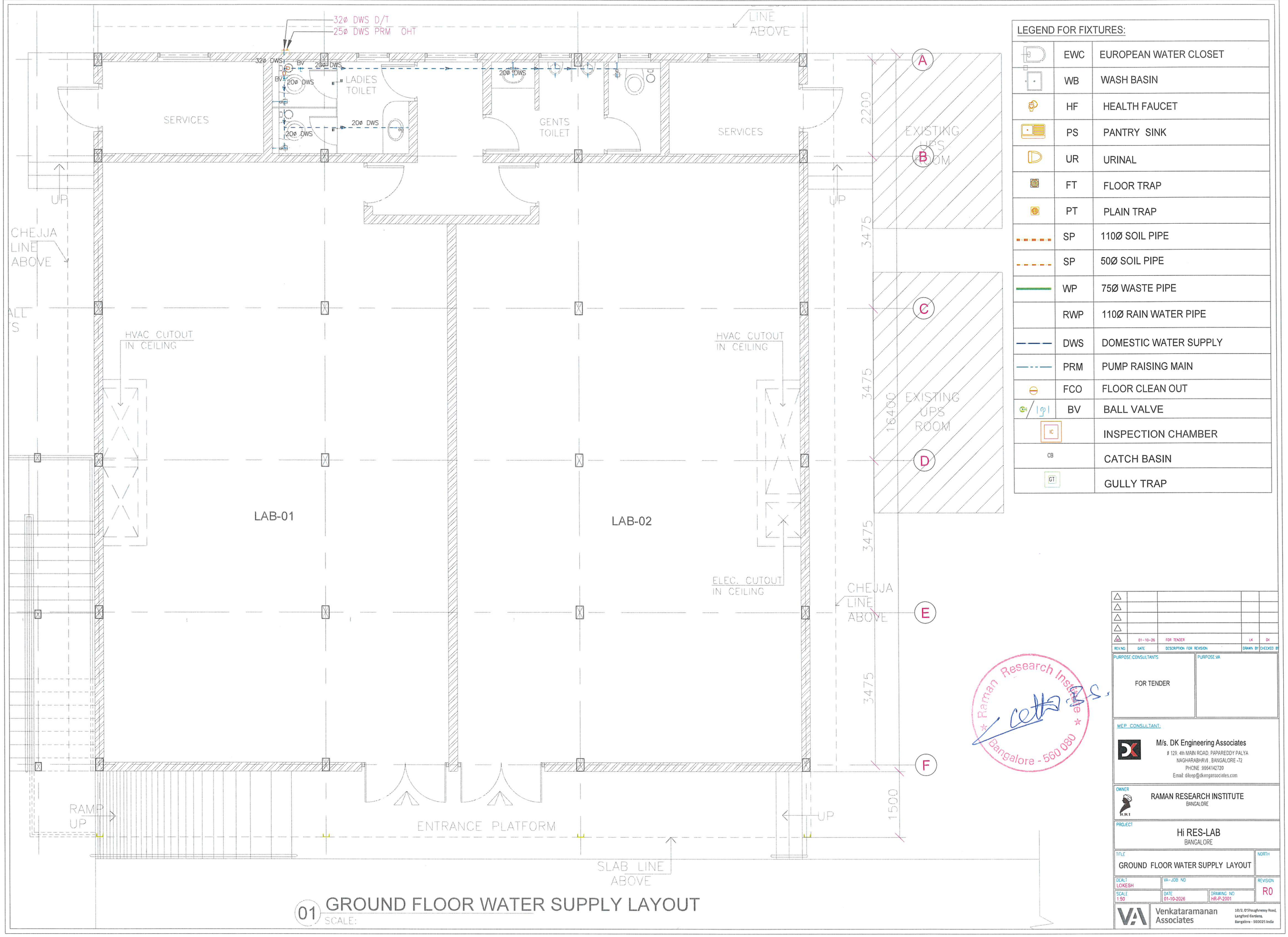

LEGEND FOR FIXTURES:		
	EWC	EUROPEAN WATER CLOSET
	WB	WASH BASIN
	HF	HEALTH FAUCET
	PS	PANTRY SINK
	UR	URINAL
	FT	FLOOR TRAP
	PT	PLAIN TRAP
	SP	110Ø SOIL PIPE
	SP	50Ø SOIL PIPE
	WP	75Ø WASTE PIPE
	RWP	110Ø RAIN WATER PIPE
	DWS	DOMESTIC WATER SUPPLY
	PRM	PUMP RAISING MAIN
	FCO	FLOOR CLEAN OUT
	BV	BALL VALVE
IC		INSPECTION CHAMBER
CB		CATCH BASIN
GT		GULLY TRAP

REV.NO	DATE	DESCRIPTION FOR REVISION	DRAWN BY	CHECKED BY
	01-10-26	FOR TENDER	LK	DK

PURPOSE:CONSULTANTS: FOR TENDER

PURPOSE:VA

MEP CONSULTANT:

M/s. DK Engineering Associates
129, 4th MAIN ROAD, PAPAREDDY PALYA
NAGHARABHAVI, BANGALORE -72
PHONE :9964142720
Email: dileep@dkengassociates.com

OWNER: RAMAN RESEARCH INSTITUTE, BANGALORE

PROJECT: Hi RES-LAB, BANGALORE

TITLE: GROUND FLOOR WATER SUPPLY LAYOUT

NORTH

DEALT	VA-JOB NO		REVISION
LOKESH			R0
SCALE: 1:50	DATE: 01-10-2026	DRAWING NO: HR-P-2001	

Venkataramanan Associates
10/2, O'Shaughnessy Road, Langford Gardens, Bangalore - 560025 India

Raman Research Institute * Bangalore - 560 080 *

01 GROUND FLOOR WATER SUPPLY LAYOUT
SCALE:

1 1A 2 3 4 5

1400 1400 5200 5850 5200

16450

A B C D E F

2200 3475 3475 3475 16400 2000

450 THK

P1 (450x600)

P2 (450x500)

1950 4500 2100

EXCAVATION DEPTH =2M

PCC 100 THK

BELOW FOOTINGS

FOOTING REINF.

Y12-150-BOTTOM MAT

Y10-150-TOP MAT

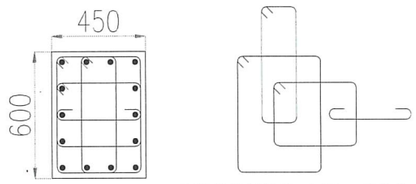

● -14Y20

P1(450x600)

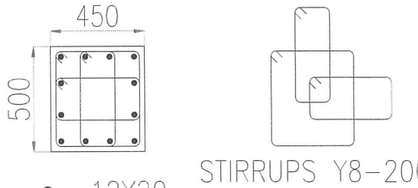

● -12Y20

P2(450x500)

REV.NO.	DATE	DESCRIPTION FOR REVISION	DRAWN BY	CHECKED BY
R0	28-09-26	FOR TENDER	BKR	OMR

PURPOSE:VA

FOR TENDER

Raman Research Institute Bangalore 560 080

OWNER

RAMAN RESEARCH INSTITUTE
BANGALORE

PROJECT

Hi RES-LAB
BANGALORE

TITLE

FOUNDATION LAYOUT

NORTH

DEALT	VA-JOB NO		REVISION
OMR			R0
SCALE	DATE	DRAWING NO	
NTS	25-08-26	HR-S-2001	

Venkataramanan Associates
10/2, O'Shaughnessy Road, Langford Gardens, Bangalore - 560025 India

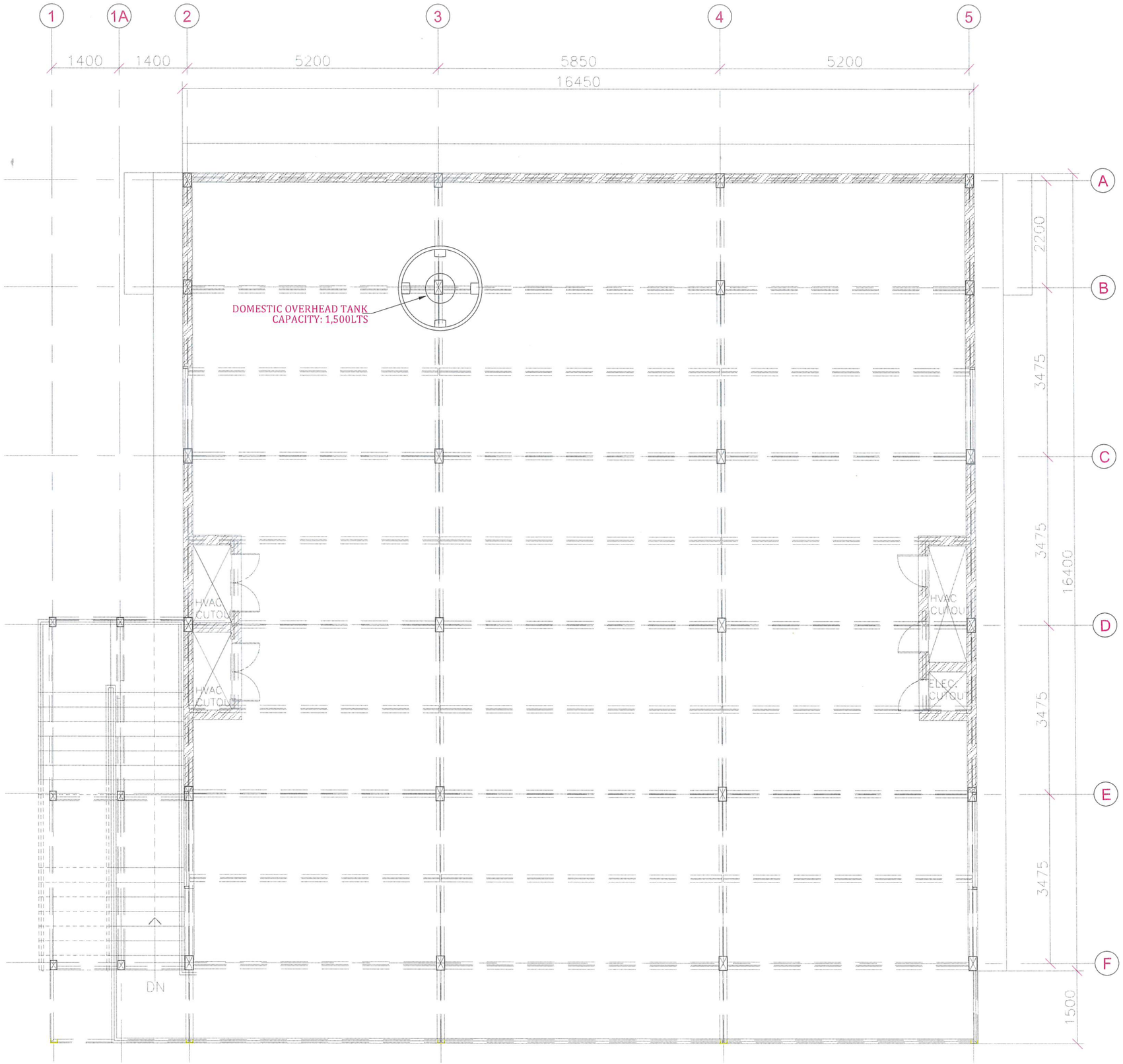

01 TERRACE FLOOR PHE LAYOUT
SCALE:

Raman Research Institute
Bangalore - 560 080

REV.NO	DATE	DESCRIPTION FOR REVISION	DRAWN BY	CHECKED BY
	01-10-26	FOR TENDER	LK	DK

PURPOSE:CONSULTANTS: FOR TENDER

PURPOSE:VA

MEP CONSULTANT:

M/s. DK Engineering Associates
129, 4th MAIN ROAD, PAPAREDDY PALYA
NAGHARABHAVI, BANGALORE -72
PHONE :9964142720
Email :dileep@dkengassociates.com

OWNER: RAMAN RESEARCH INSTITUTE
BANGALORE

PROJECT: Hi RES-LAB
BANGALORE

TITLE: TERRACE FLOOR PHE LAYOUT

NORTH

DEALT: LOKESH

VA-JOB NO

REVISION: R0

SCALE: 1:50

DATE: 01-10-2026

DRAWING NO: HR-P-2003

Venkataramanan Associates
10/2, O'Shaughnessy Road, Langford Gardens, Bengaluru - 560025 India

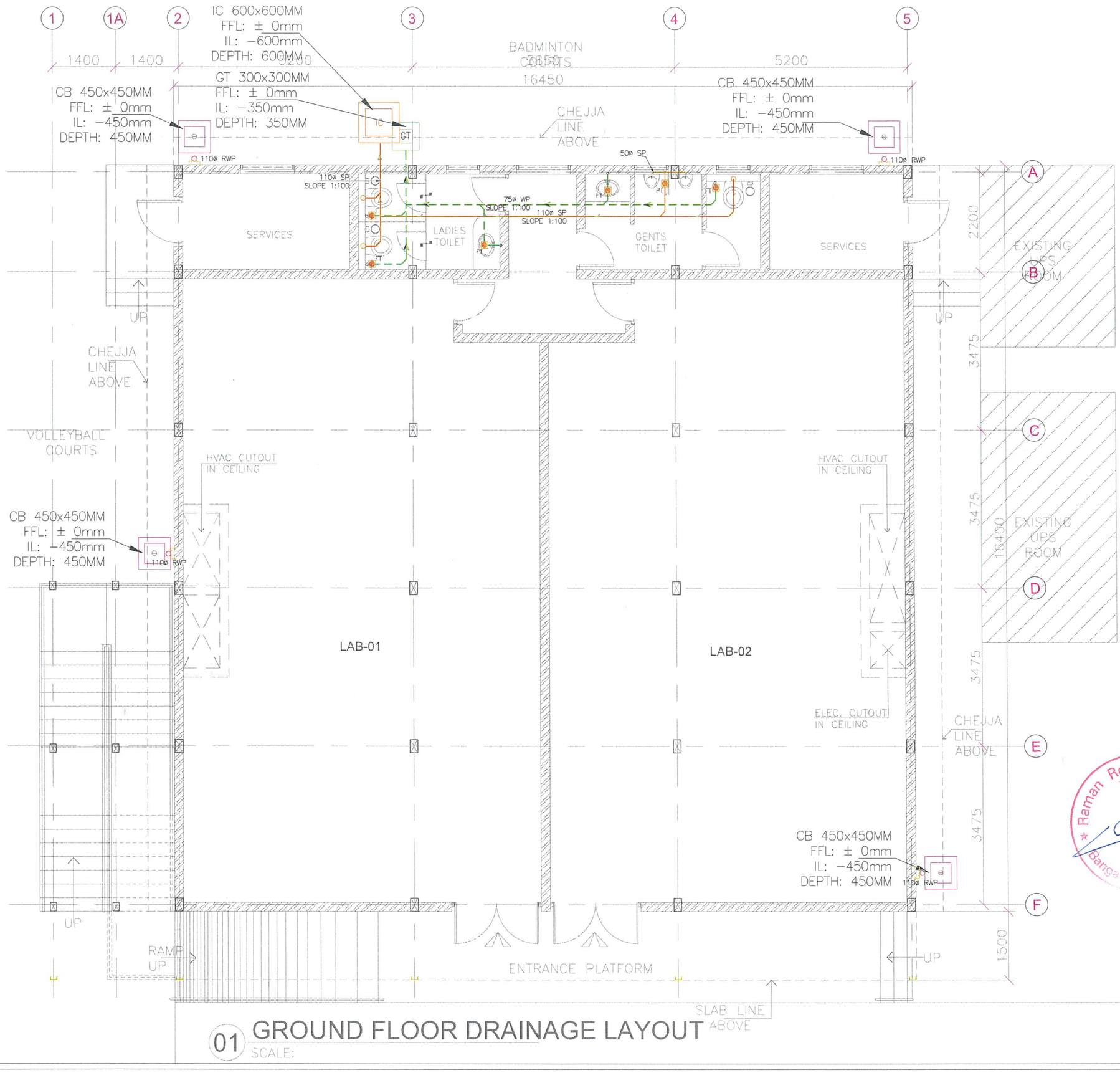

01 GROUND FLOOR DRAINAGE LAYOUT
SCALE:

LEGEND FOR FIXTURES:

	EWC	EUROPEAN WATER CLOSET
	WB	WASH BASIN
	HF	HEALTH FAUCET
	PS	PANTRY SINK
	UR	URINAL
	FT	FLOOR TRAP
	PT	PLAIN TRAP
	SP	110Ø SOIL PIPE
	SP	50Ø SOIL PIPE
	WP	75Ø WASTE PIPE
	RWP	110Ø RAIN WATER PIPE
	DWS	DOMESTIC WATER SUPPLY
	PRM	PUMP RAISING MAIN
	FCO	FLOOR CLEAN OUT
	BV	BALL VALVE
IC		INSPECTION CHAMBER
CB		CATCH BASIN
GT		GULLY TRAP

REV.NO	DATE	DESCRIPTION FOR REVISON	DRAWN BY	CHECKED BY
	01-10-26	FOR TENDER	LK	DK

PURPOSE:CONSULTANTS: FOR TENDER

PURPOSE:VA

MEP CONSULTANT:
M/s. DK Engineering Associates
129, 4th MAIN ROAD, PAPAREDDY PALYA
NAGHARABHAVI, BANGALORE -72
PHONE 9964142720
Email: dileep@dkenggassociates.com

OWNER: RAMAN RESEARCH INSTITUTE, BANGALORE

PROJECT: Hi RES-LAB, BANGALORE

TITLE: GROUND FLOOR DRAINAGE LAYOUT

NORTH

DEALT	VA-JOB NO	REVISION
LOKESH		R0
SCALE: 1:50	DATE: 01-10-2026	DRAWING NO: HR-P-2002

Venkataramanan Associates
10/2, O'Shaughnessy Road, Langford Gardens, Bangalore - 560025 India

Raman Research Institute Bangalore

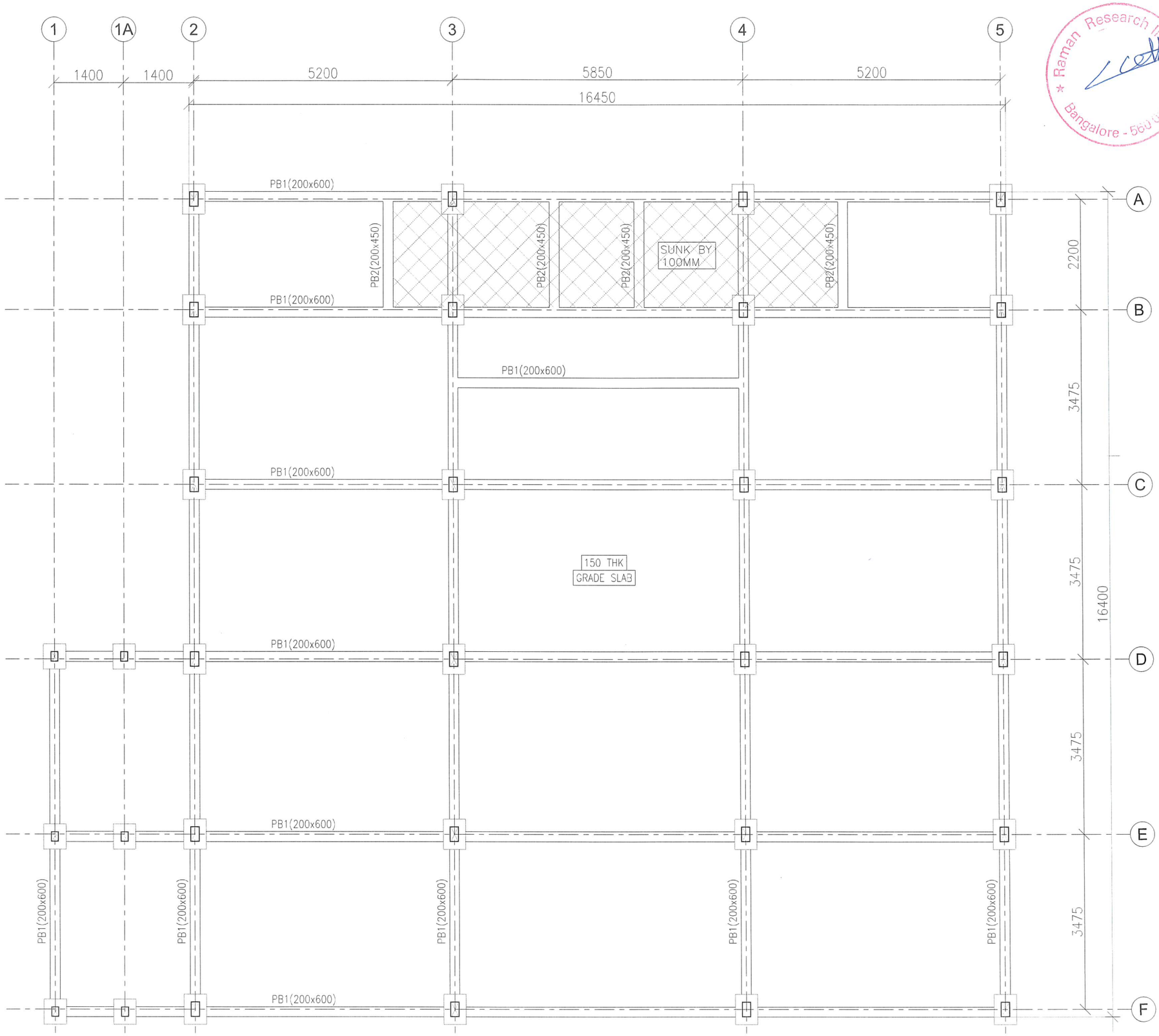

Raman Research Institute
Bangalore - 560 080

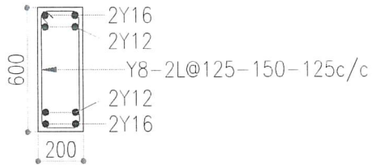

PB1(200x600)



PB2(200x450)

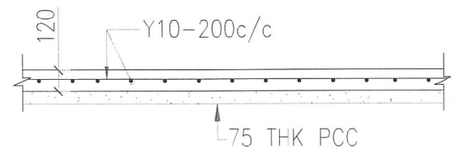

FULLY COMPACTED SOIL WITH 95% PROCTOR DENSITY
(TO BE TESTED AND APPROVED BEFORE LAYING PCC)

GRADE SLAB DETAILS

REV.NO.	DATE	DESCRIPTION FOR REVISION	DRAWN BY	CHECKED BY
R0	28-09-26	FOR TENDER	BKR	OMR

PURPOSE:VA

FOR TENDER

OWNER

RAMAN RESEARCH INSTITUTE
BANGALORE

PROJECT

Hi RES-LAB
BANGALORE

TITLE

PLINTH BEAM LAYOUT

NORTH

DEALT	VA-JOB NO		REVISION
OMR			R0
SCALE	DATE	DRAWING NO	
NTS	28-09-26	HR-S-2002	

Venkataramanan Associates
10/2, O'Shaughnessy Road,
Langford Gardens,
Bangalore - 560025 India

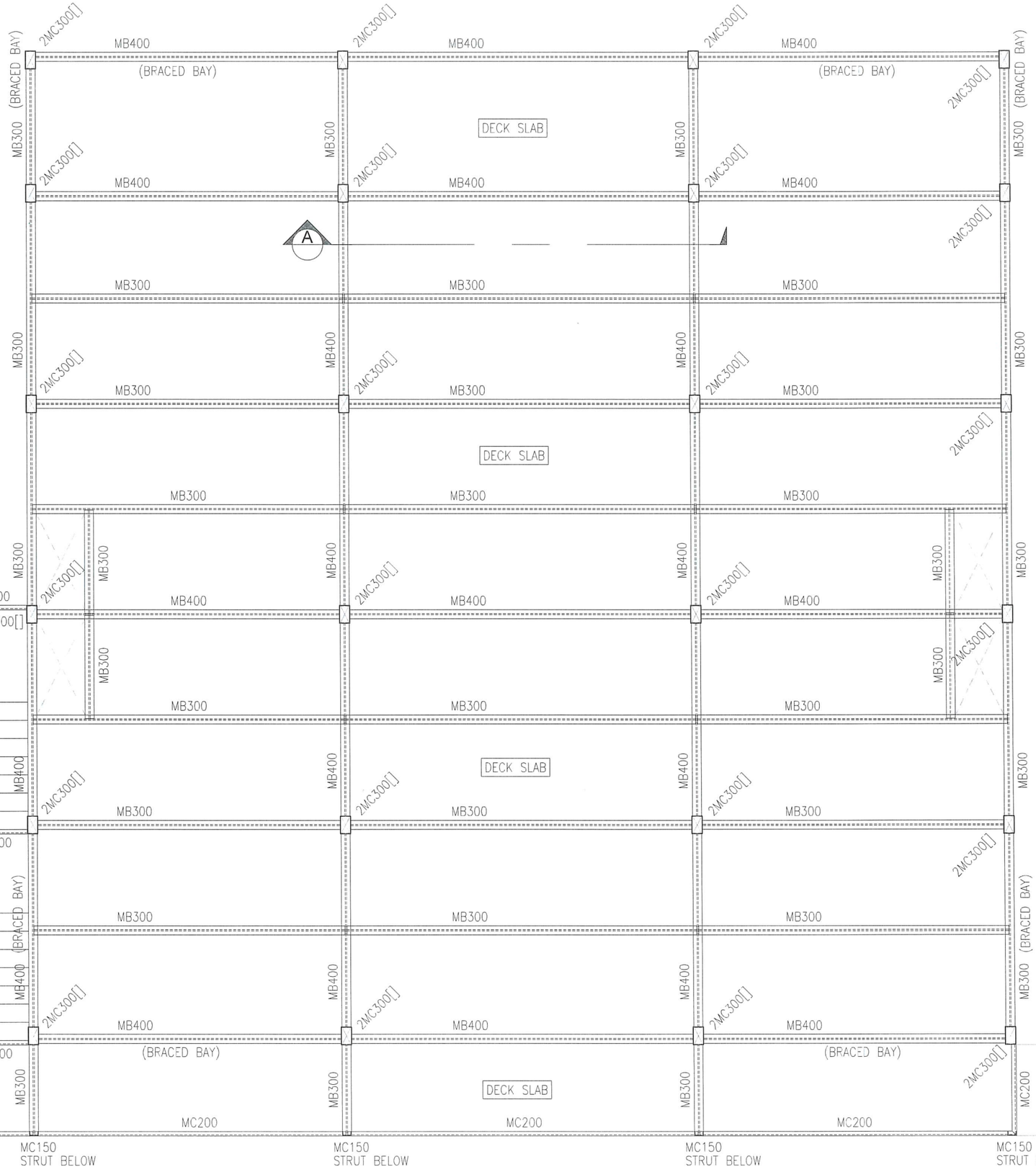

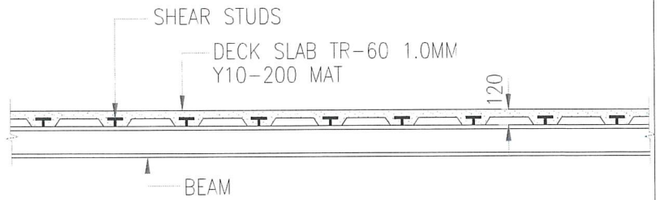

SECTION - A

01

DECK SLAB DETAIL

Raman Research Institute
Bangalore - 560 080

REV.NO.	DATE	DESCRIPTION FOR REVISION	DRAWN BY	CHECKED BY
1	28-09-26	FOR TENDER	BKR	OMR

PURPOSE:VA

FOR TENDER

OWNER

RAMAN RESEARCH INSTITUTE
BANGALORE

PROJECT

Hi RES-LAB
BANGALORE

TITLE

TYPICAL FLOOR LAYOUT

NORTH

DEALT	VA-JOB NO	REVISION
OMR		R0

SCALE	DATE	DRAWING NO
NTS	28-09-26	HR-S-2003

Venkataramanan Associates
10/2, O'Shaughnessy Road,
Langford Gardens,
Bangalore - 560025 India

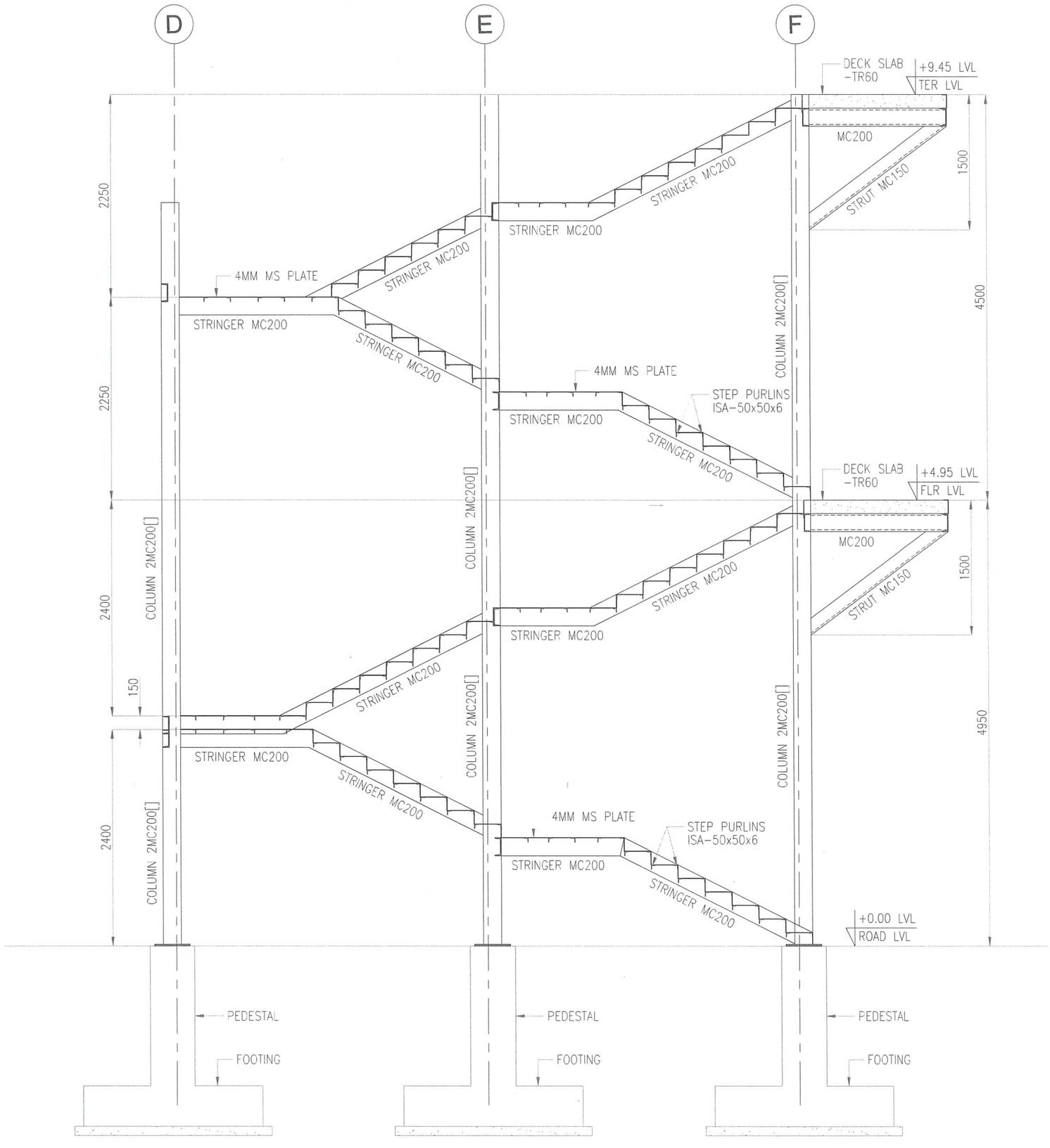

REV.NO.	DATE	DESCRIPTION FOR REVISION	DRAWN BY	CHECKED BY
R0	28-09-26	FOR TENDER	BKR	OMR

PURPOSE:VA

FOR TENDER

OWNER

RAMAN RESEARCH INSTITUTE
BANGALORE

PROJECT

Hi RES-LAB
BANGALORE

TITLE

MS STAIRCASE DETAILS

NORTH

DEALT	VA-JOB NO	REVISION
OMR		R0
SCALE: NTS	DATE: 28-09-26	DRAWING NO: HR-S-4000

Venkataramanan Associates
10/2, O'Shaughnessy Road, Langford Gardens, Bangalore - 560025 India